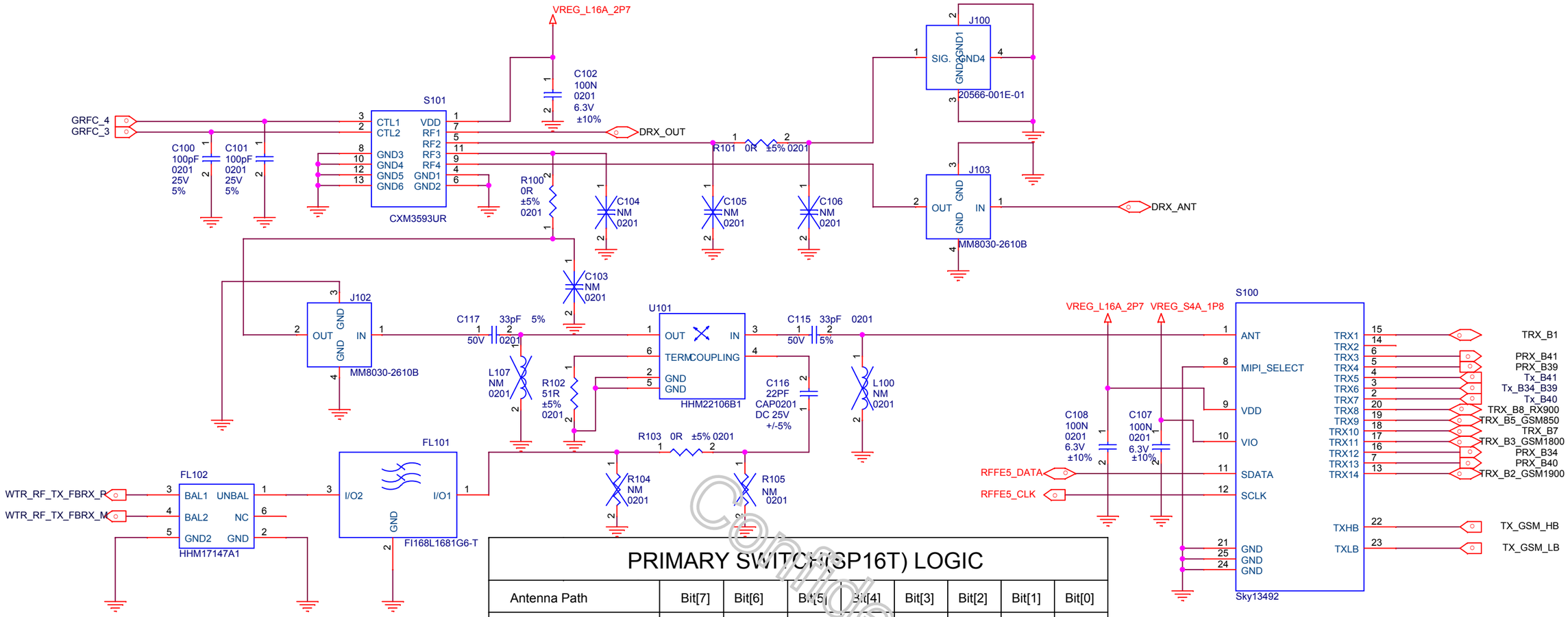

Confidential

PRIMARY SWITCH(SP16T) LOGIC

Antenna Path	Bit[7]	Bit[6]	Bit[5]	Bit[4]	Bit[3]	Bit[2]	Bit[1]	Bit[0]
Sleep mode (standby)	X	0	0	0	0	0	0	0
2G transmit low band	X	0	0	0	1	0	1	0
2G transmit high band	X	0	0	0	1	0	0	0
TRX1	X	0	0	0	0	1	0	0
TRX2	X	0	0	0	0	1	0	1
TRX3	X	0	0	0	0	1	1	0
TRX4	X	0	0	0	0	1	1	1
TRX5	X	0	0	0	1	0	0	1
TRX6	X	0	0	0	1	0	1	1
TRX7	X	0	0	0	1	1	0	0
TRX8	X	0	0	0	0	0	0	1
TRX9	X	0	0	0	0	0	1	0
TRX10	X	0	0	0	0	0	1	1
TRX11	X	0	0	0	1	1	0	1
TRX12	X	0	0	0	1	1	1	0
TRX13	X	0	0	1	0	0	0	0
TRX14	X	0	0	1	0	0	0	1
Isolation mode (warm–up)	X	1	1	1	1	1	1	1

CXM3593

CTL 1	CTL 2	Active path
L	H	RF1-RF4 RF2-RF3
H	L	RF1-RF3 RF2-RF4

Primary Ant Connector, Coupler and Primary Switchplexer

Title	X7	
Size A3	Document Number <Doc>	Rev P0
Date: Monday, March 23, 2015	Sheet 1 of 41	

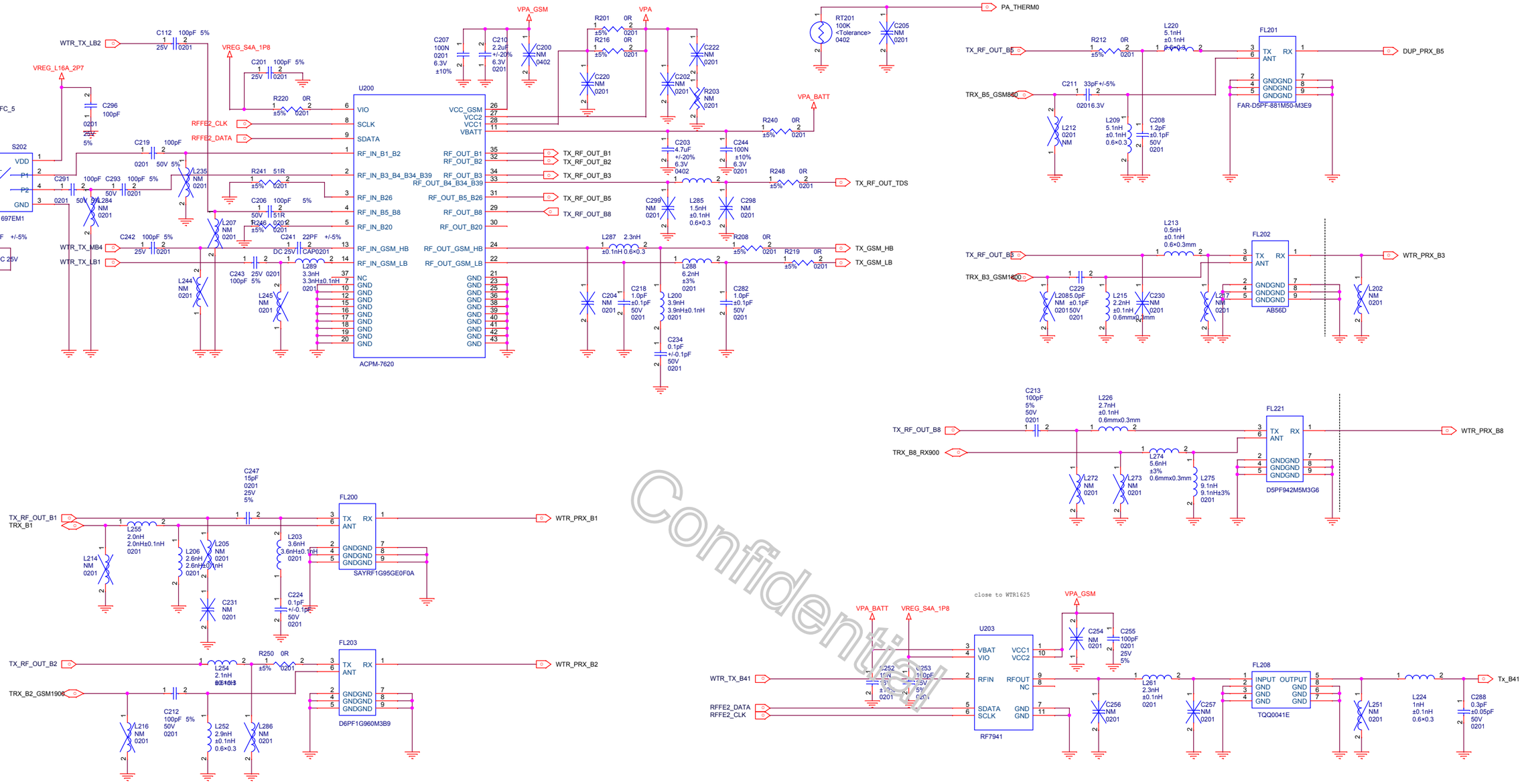

Confidential

RF7301 LOGIC

POWER MODE	PA_ON3_B34_B39	TDS_PA0_R0	TDS_PA0_R1
POWER DOWN MODE	L	L	L
STANDBY MODE	L	X	X
HIGH POWER STATE	H	L	L
MEDIUM POWER STATE	H	H	L
LOW POWER STATE		H	H

Title	X7	
Size A2	Document Number <Doc>	Rev P0
Date: Monday, March 23, 2015	Sheet 2 of 41	

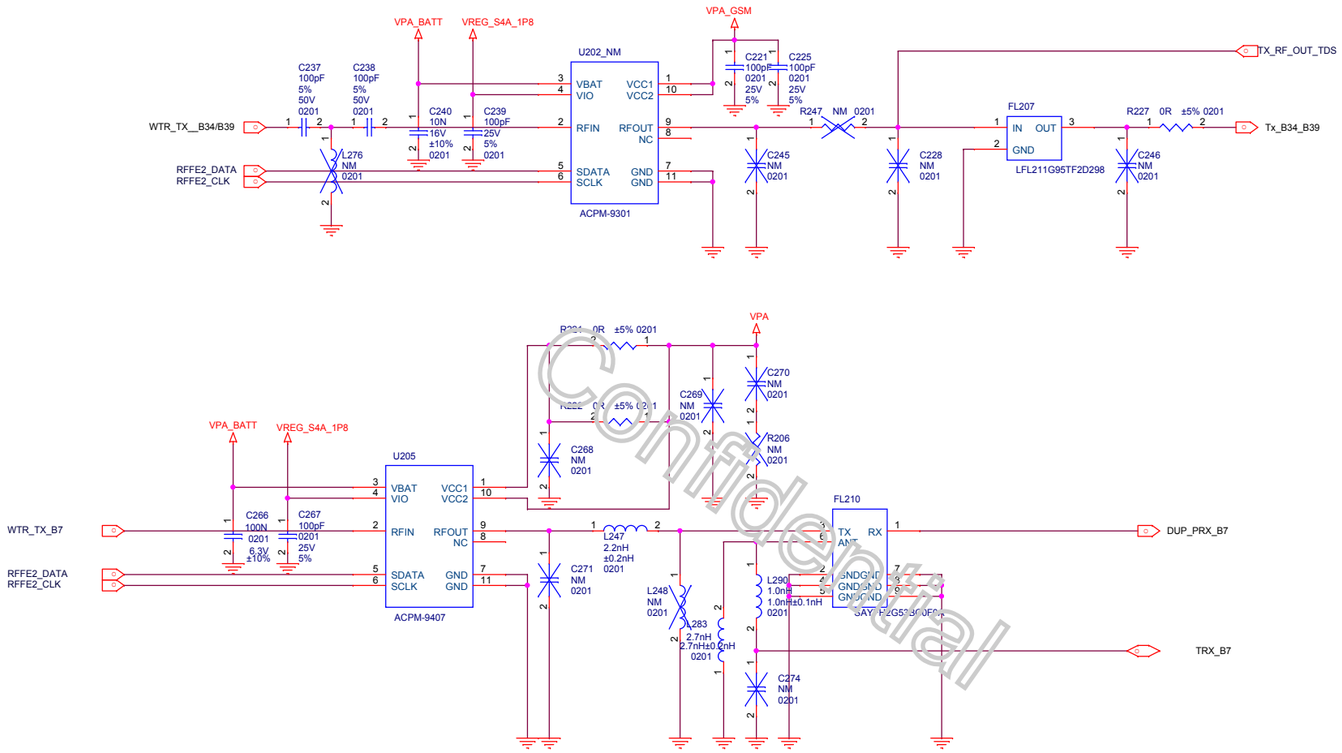

Confidential

RF7301 LOGIC

POWER MODE	PA_ON3_B34_B39	TDS_PA0_R0	TDS_PA0_R1
POWER DOWN MODE	L	L	L
STANDBY MODE	L	X	X
HIGH POWER STATE	H	L	L
MEDIUM POWER STATE	H	H	L
LOW POWER STATE		H	H

Title	X7	
Size A2	Document Number <Doc>	Rev P0
Date: Monday, March 23, 2015	Sheet 3 of 41	

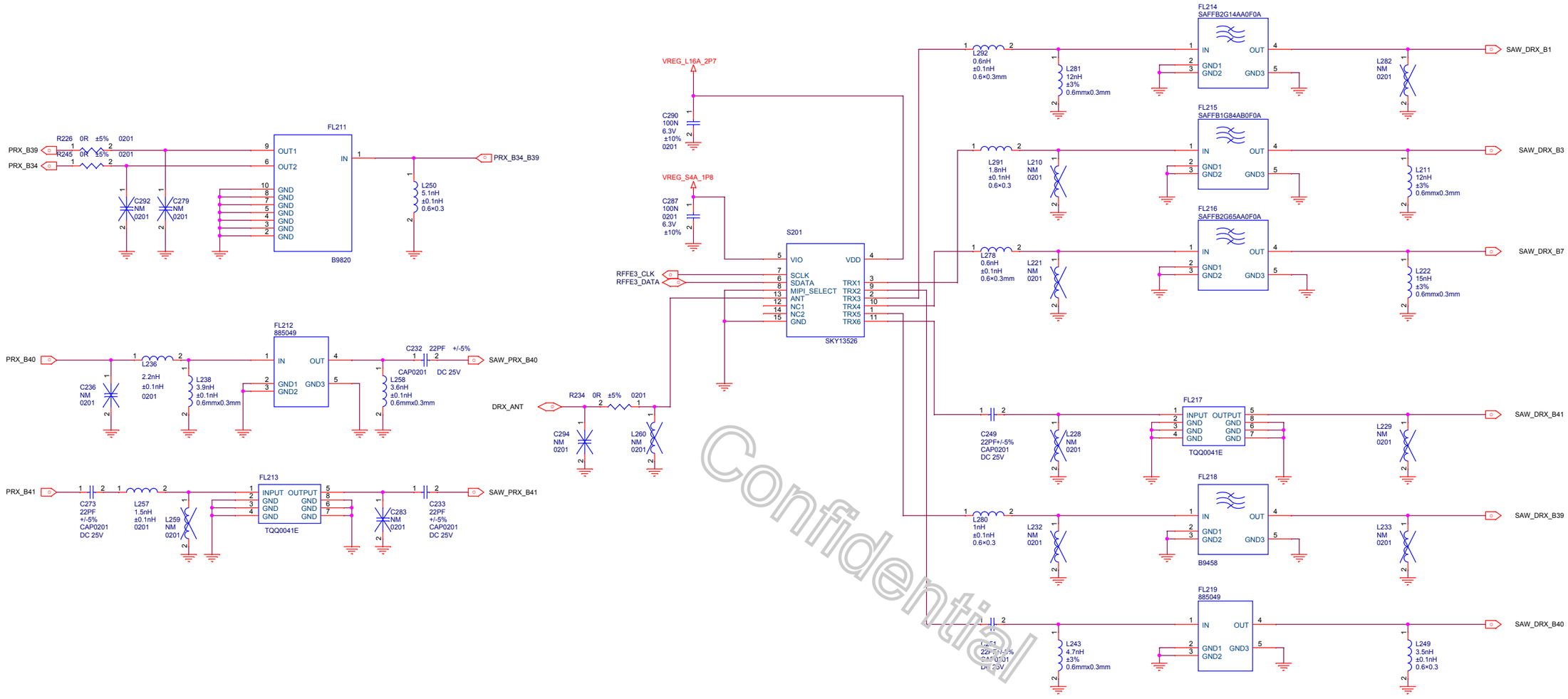

Confidential

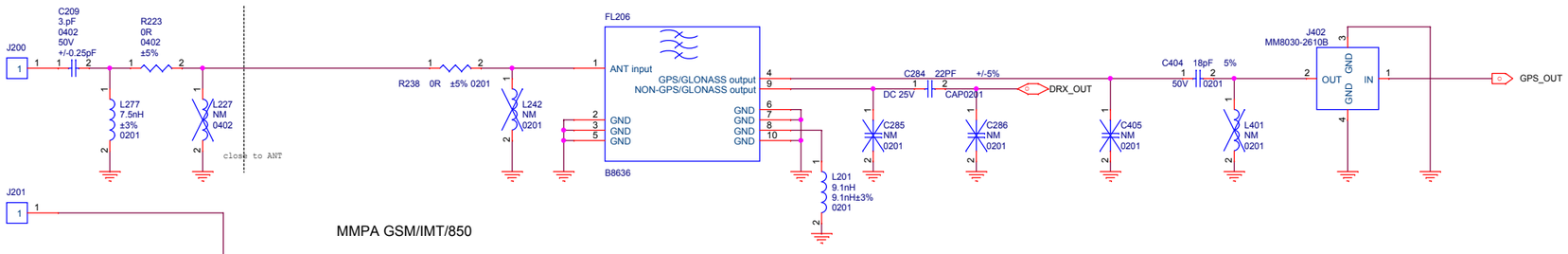

MMPA GSM/IMT/850

PRx and Drx	SP4T_CTRL_1	SP4T_CTRL_2
B2	H	L
B34	L	L
B1	L	H
B3	H	H

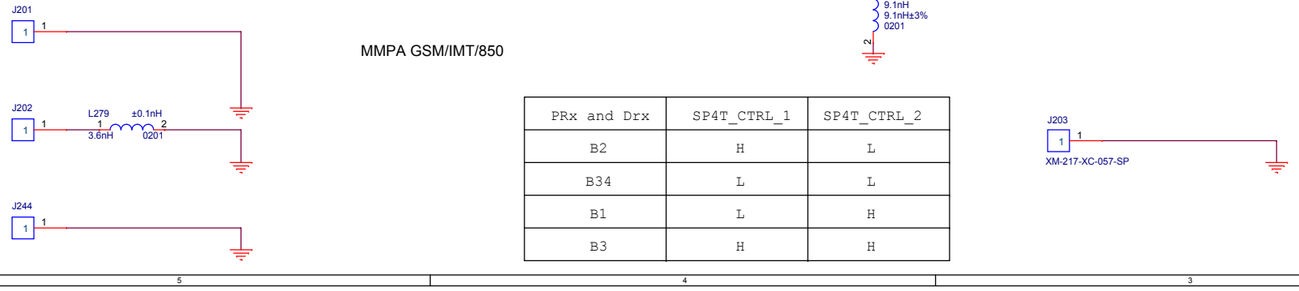

Title	X7	
Size A2	Document Number <Doc>	Rev P0
Date: Monday, March 23, 2015	Sheet 4 of 41	

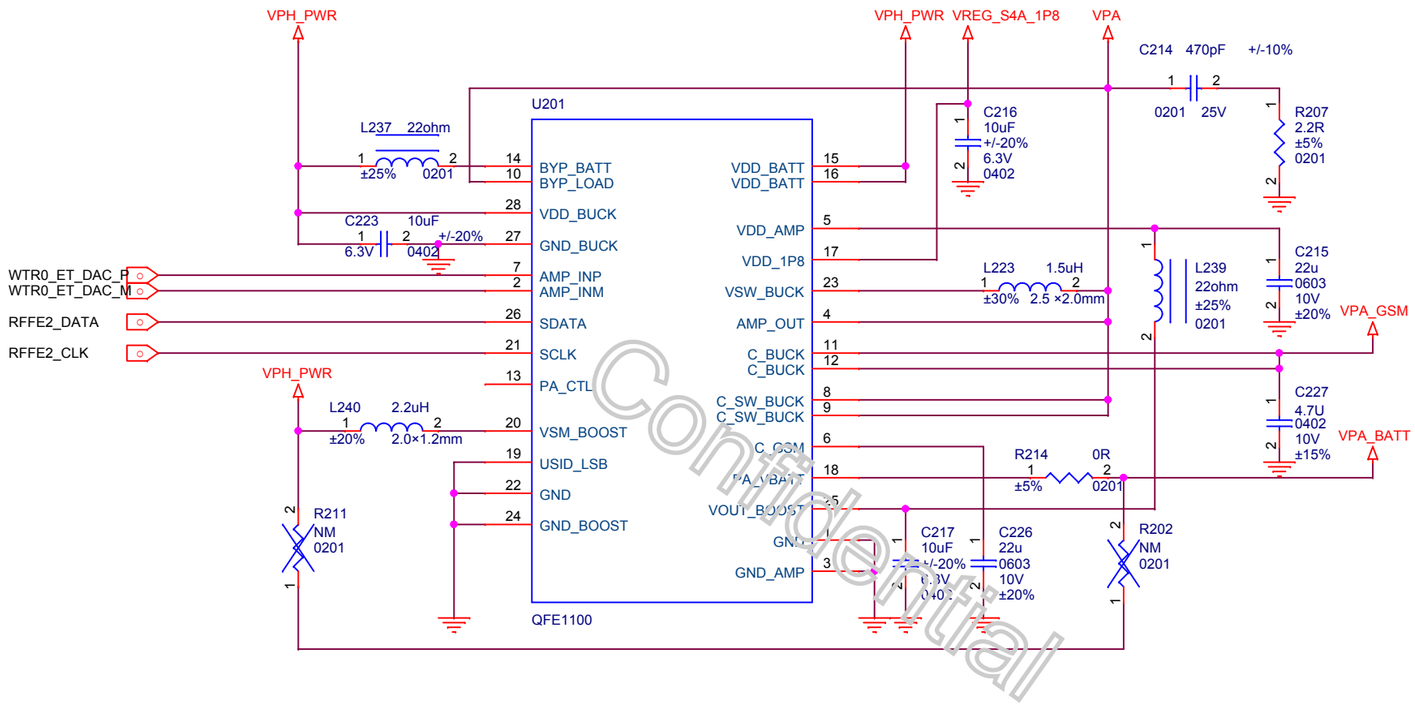

Confidential

QFE1100

Title	X7	
Size A3	Document Number <Doc>	Rev P0
Date: Monday, March 23, 2015	Sheet 5 of 41	

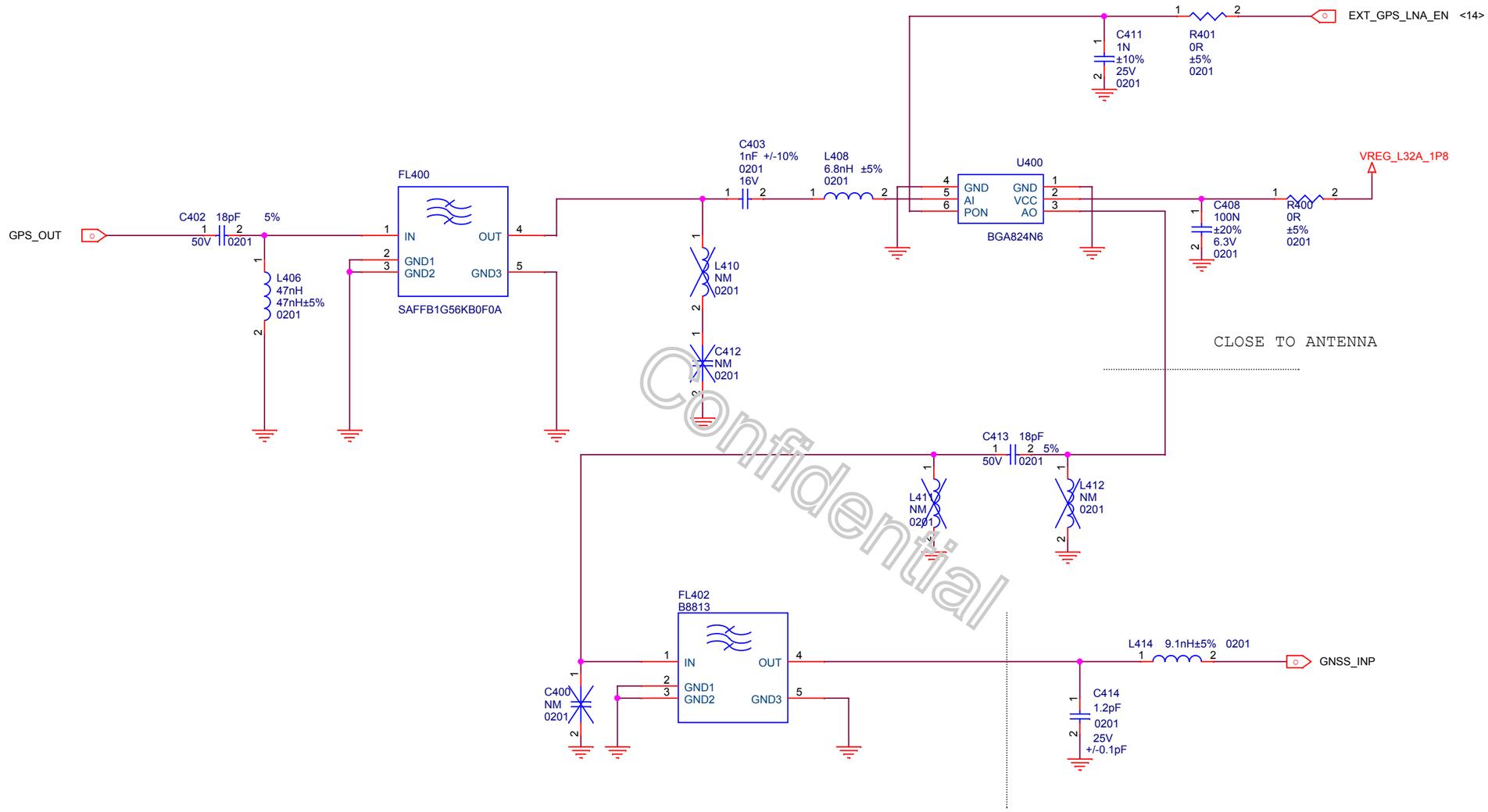

Confidential

GPS

Title	X7	
Size A3	Document Number <Doc>	Rev P0
Date: Monday, March 23, 2015	Sheet 6 of 41	

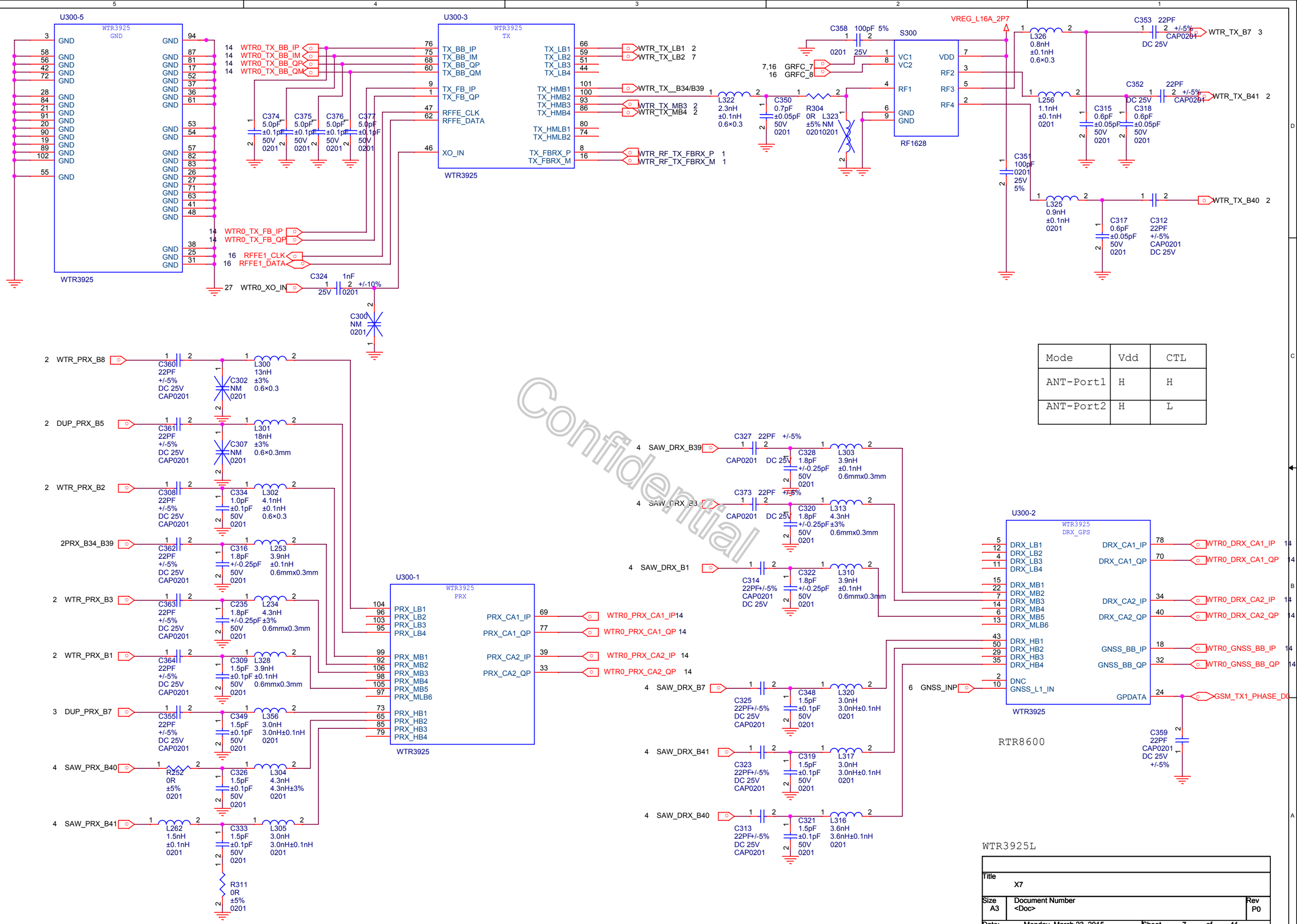

Mode	Vdd	CTL
ANT-Port1	H	H
ANT-Port2	H	L

WTR3925L

Title	X7	
Size A3	Document Number <Doc>	Rev P0
Date: Monday, March 23, 2015	Sheet 7 of 41	

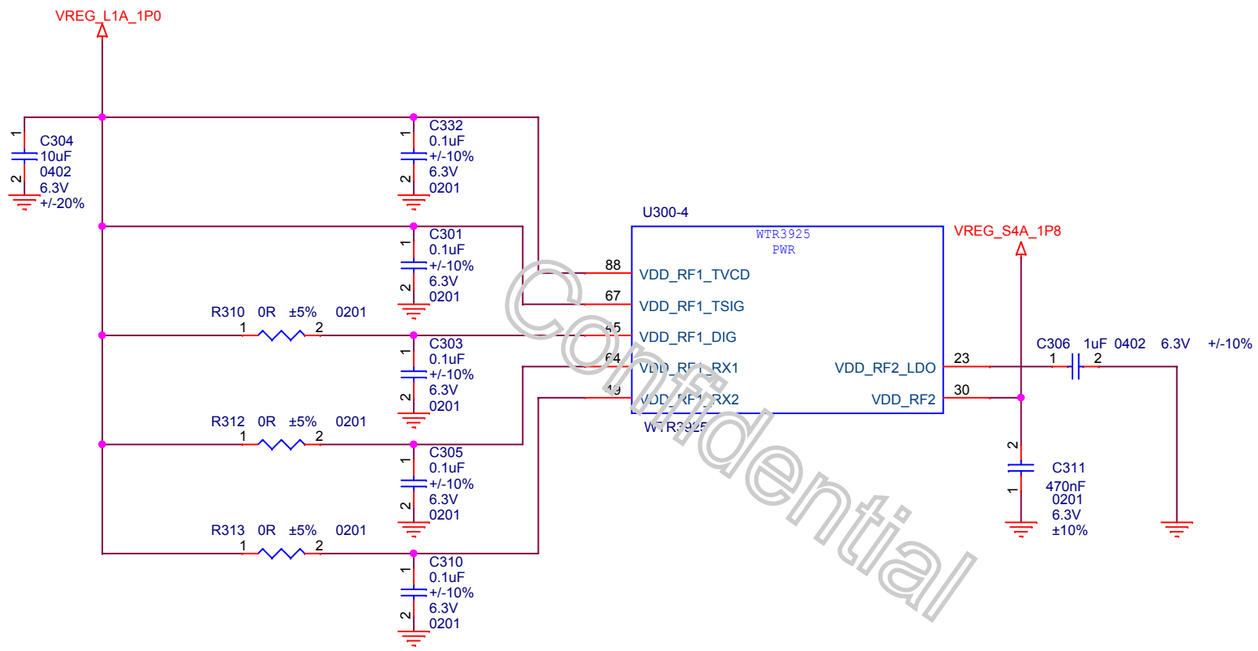

Confidential

RTR8600 BYPASS

Title	X7	
Size A3	Document Number <Doc>	Rev P0
Date: Monday, March 23, 2015	Sheet 8 of 41	

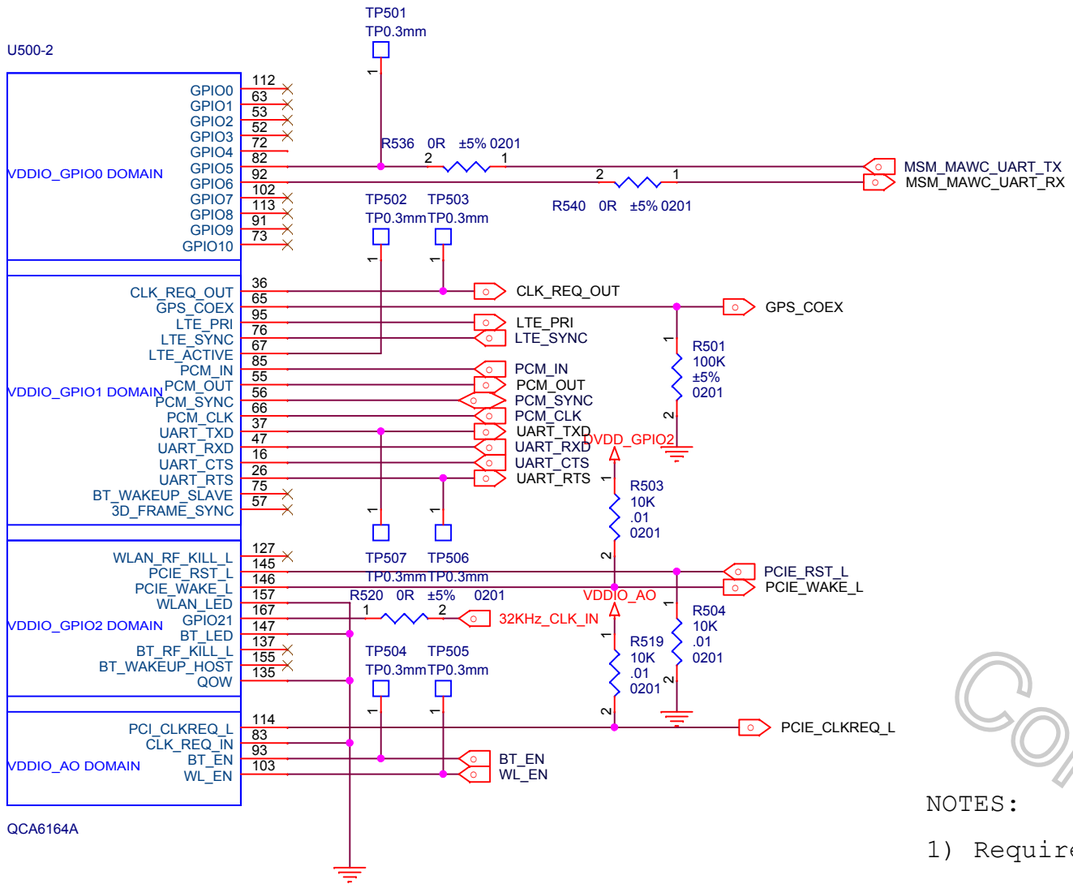

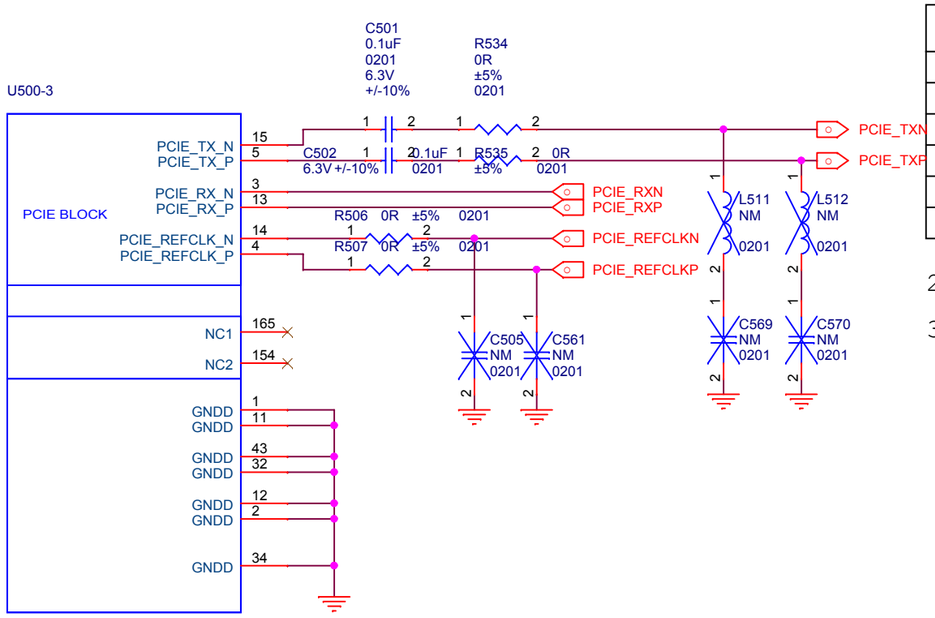

Note: Dedicated GND for pins 1, 11, 43, 32, 12, 2, and 34

NOTES:

1) Required pull-up and pull-down resistors at host for open drain signals

PIN#	NET NAME	TYPE	NOTES
146	PCIE_WAKE_L	OD	Ext. pull-up to VDDIO_GPIO2 at host side
114	PCIE_CLKREQ_L	OD	Ext. pull-up to VDDIO_AO at host side
145	PCIE_RST_L	OD	Ext. pull-down to GNDat host side
157	WLAN_LED	OD	Ext. pull-up to VDDIO_GPIO2 at host side; otherwise short to GND
147	BT_LED	OD	If used, ext. pull-up to VDDIO_GPIO2 at host side; otherwise short to GND
135	QOW	OD	If used, Ext. pull-up to VDDIO_GPIO2 at host side; otherwise short to GND

2) For PCIE_REFCLKN/P, place the series resistors and shunt capacitors close to QCA61x4A-1

3) For PCIE_TXN/P, place C501 and C502 close to QCA6164A

Confidential

BI/WIFI

Title	X7	
Size A3	Document Number <Doc>	Rev P0
Date: Monday, March 23, 2015	Sheet 9 of 41	

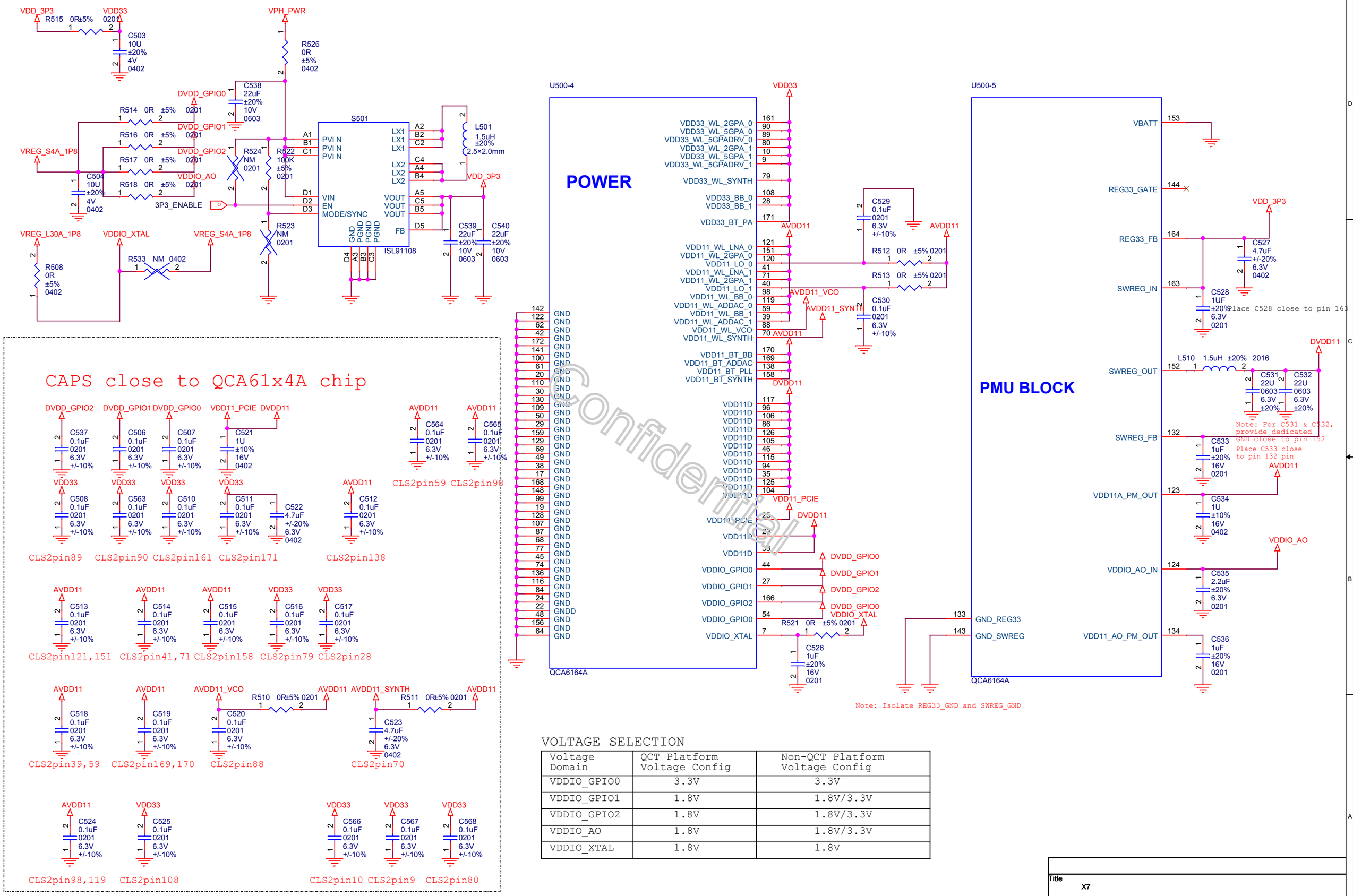

Confidential

VOLTAGE SELECTION

Voltage Domain	QCT Platform Voltage Config	Non-QCT Platform Voltage Config
VDDIO_GPIO0	3.3V	3.3V
VDDIO_GPIO1	1.8V	1.8V/3.3V
VDDIO_GPIO2	1.8V	1.8V/3.3V
VDDIO_AO	1.8V	1.8V/3.3V
VDDIO_XTAL	1.8V	1.8V

Title	X7	
Size A3	Document Number <Doc>	Rev P0
Date: Monday, March 23, 2015	Sheet 10 of 41	

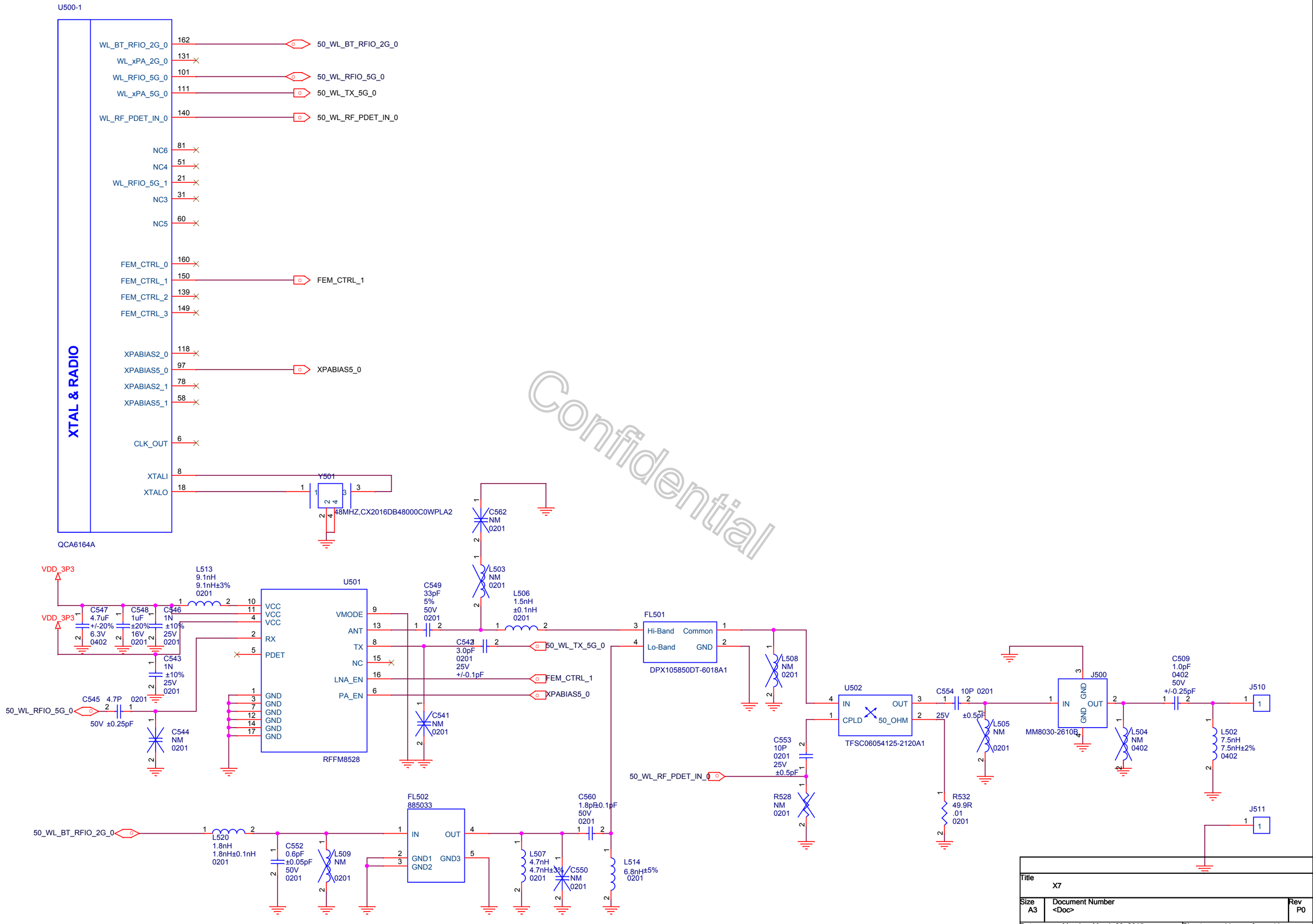

Title	X7	
Size A3	Document Number <Doc>	Rev P0
Date: Monday, March 23, 2015	Sheet 11 of 41	

Confidential

Title	X7	
Size A3	Document Number <Doc>	Rev P0
Date: Monday, March 23, 2015	Sheet 12 of 41	

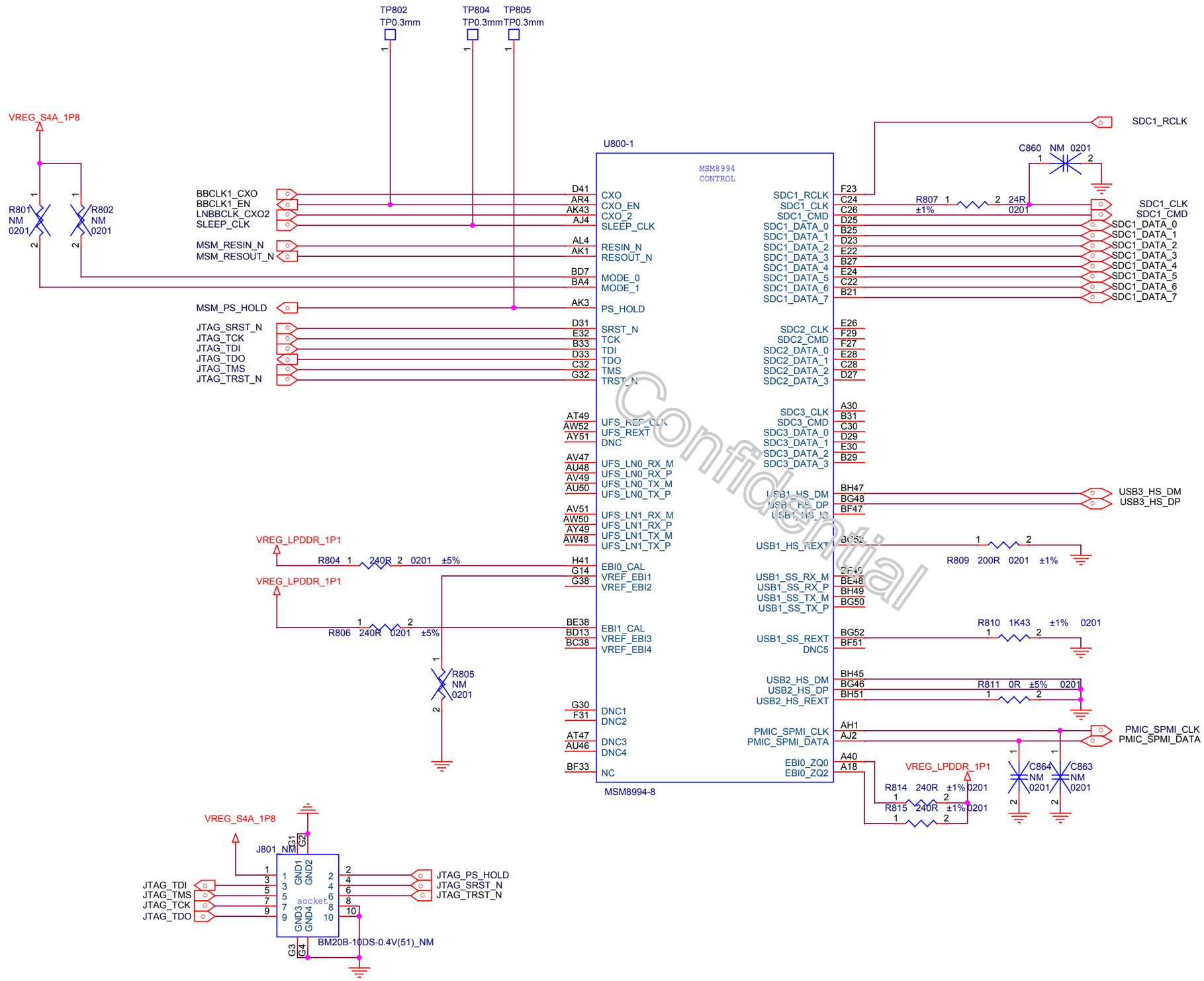

Confidential

Title	X7	
Size A3	Document Number <Doc>	Rev P0
Date: Wednesday, March 25, 2015	Sheet 13 of 41	

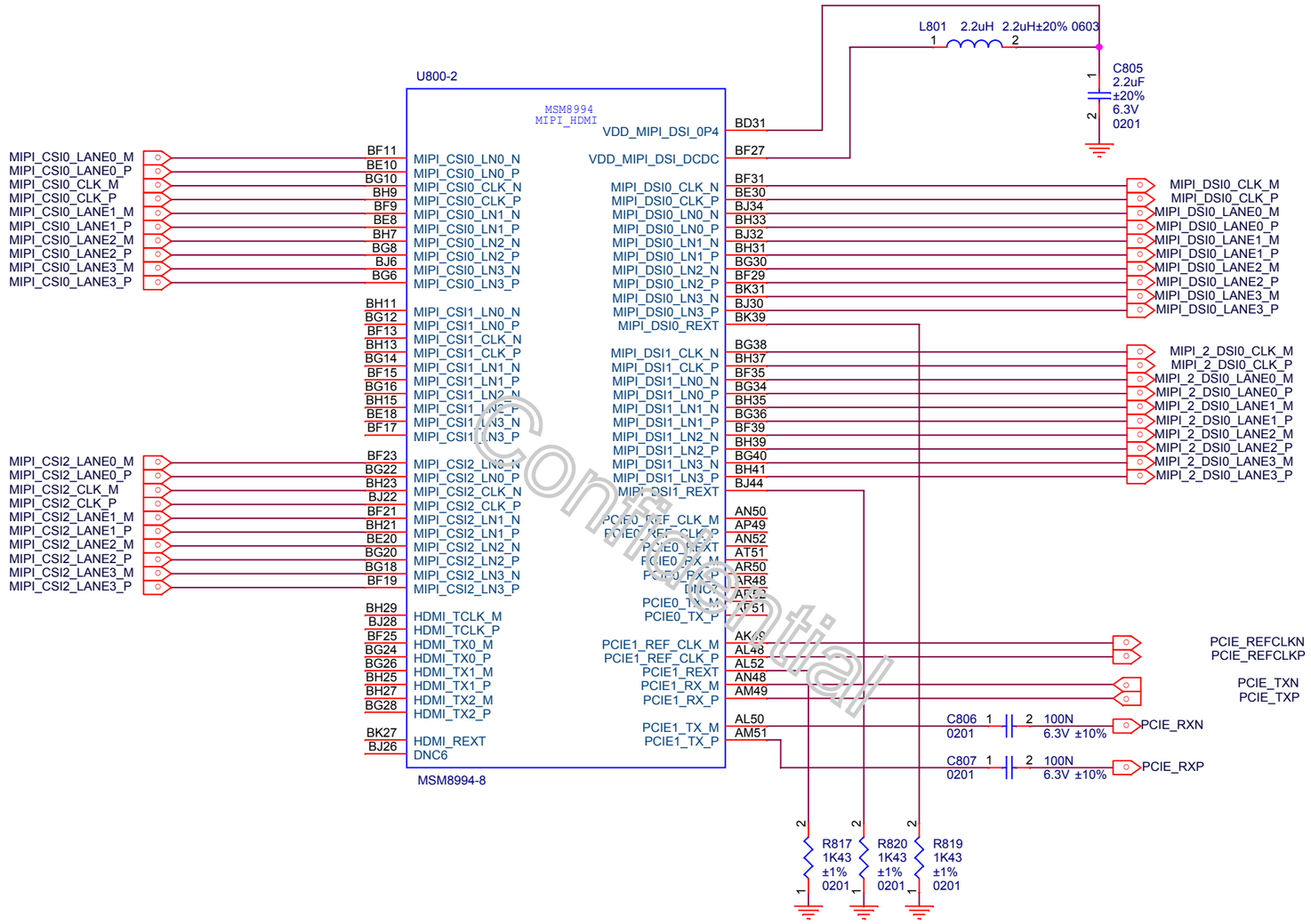

Title	X7	
Size A3	Document Number <Doc>	Rev P0
Date: Wednesday, March 25, 2015	Sheet 14 of 41	

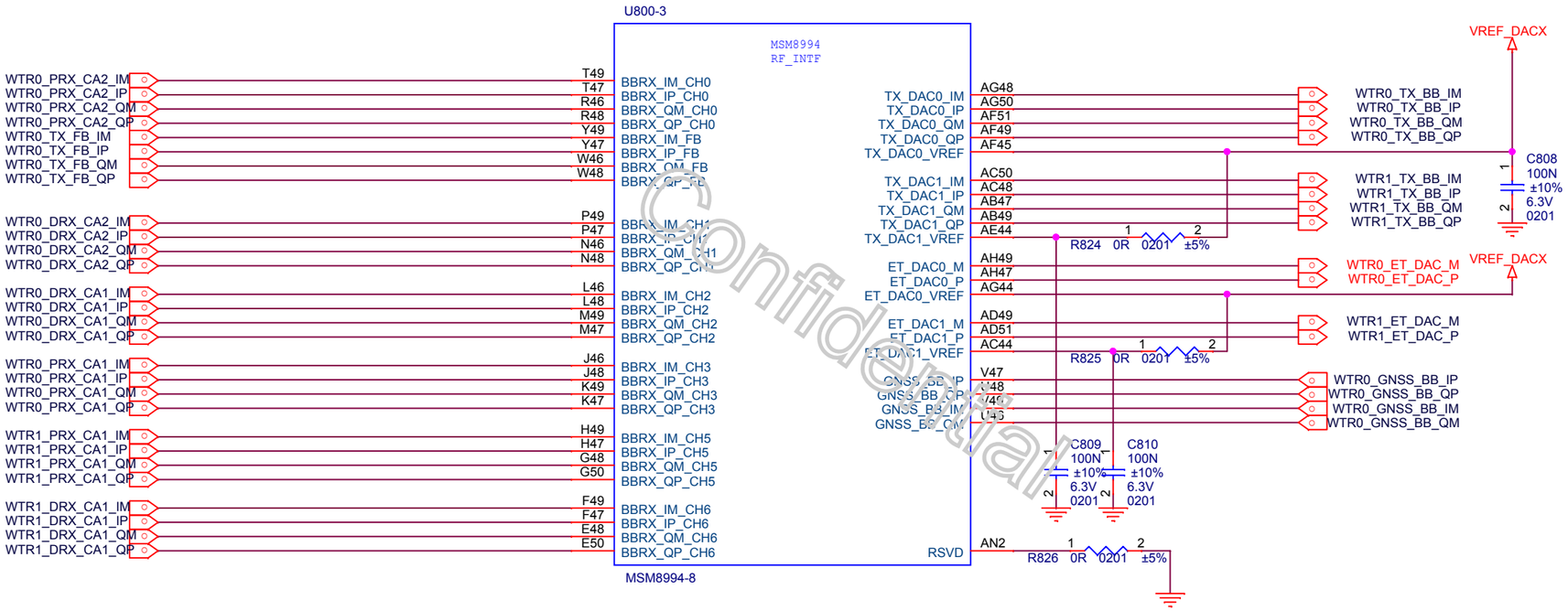

Confidential

Title	X7		
Size A3	Document Number <Doc>		Rev P0
Date: Wednesday, March 25, 2015	Sheet 15 of 41		

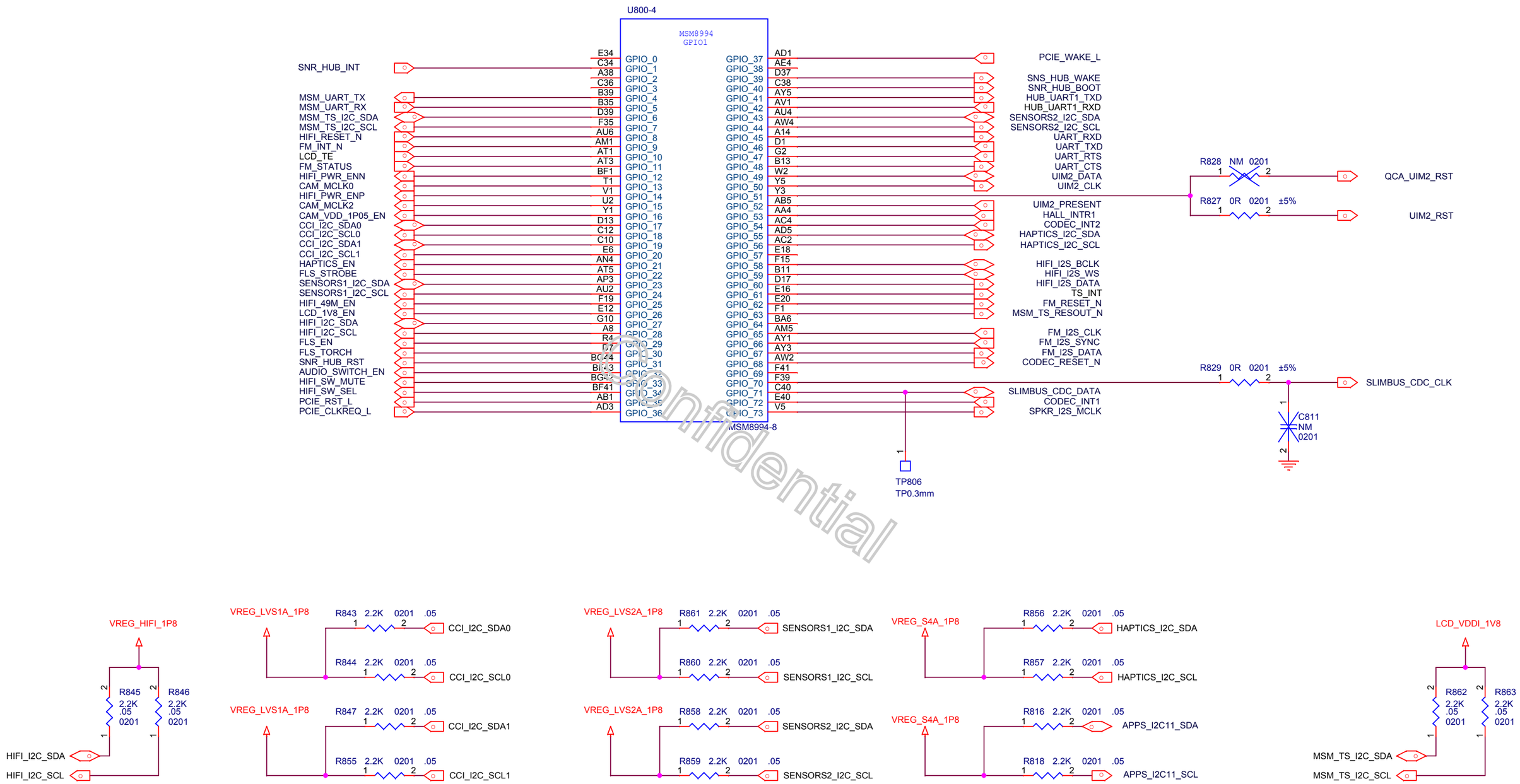

Confidential

Title	X7		
Size A3	Document Number <Doc>		Rev P0
Date: Wednesday, March 25, 2015	Sheet 16 of 41		

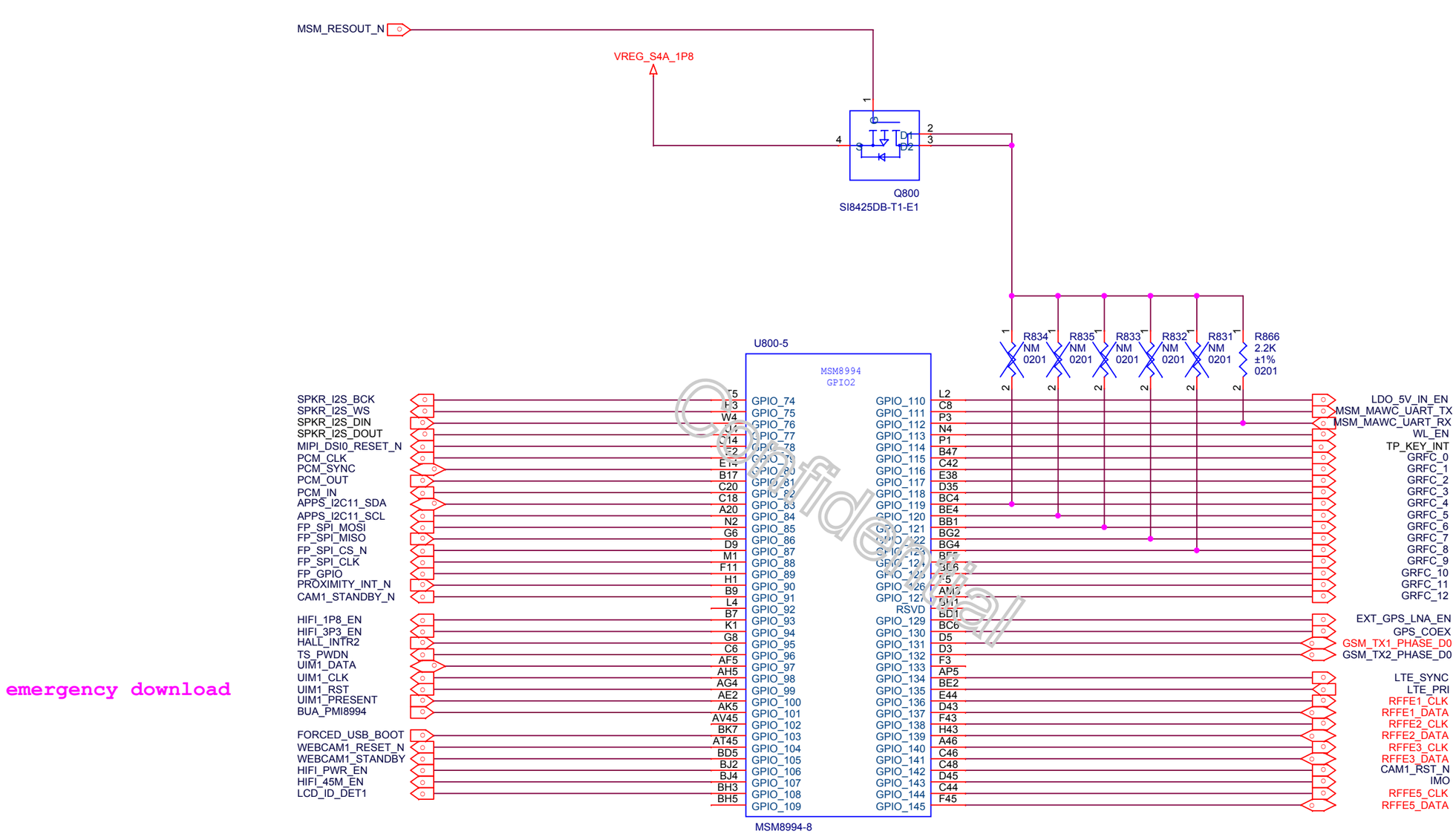

emergency download

Confidential

Title	X7		
Size A3	Document Number <Doc>		Rev P0
Date: Wednesday, March 25, 2015	Sheet 17 of 41		

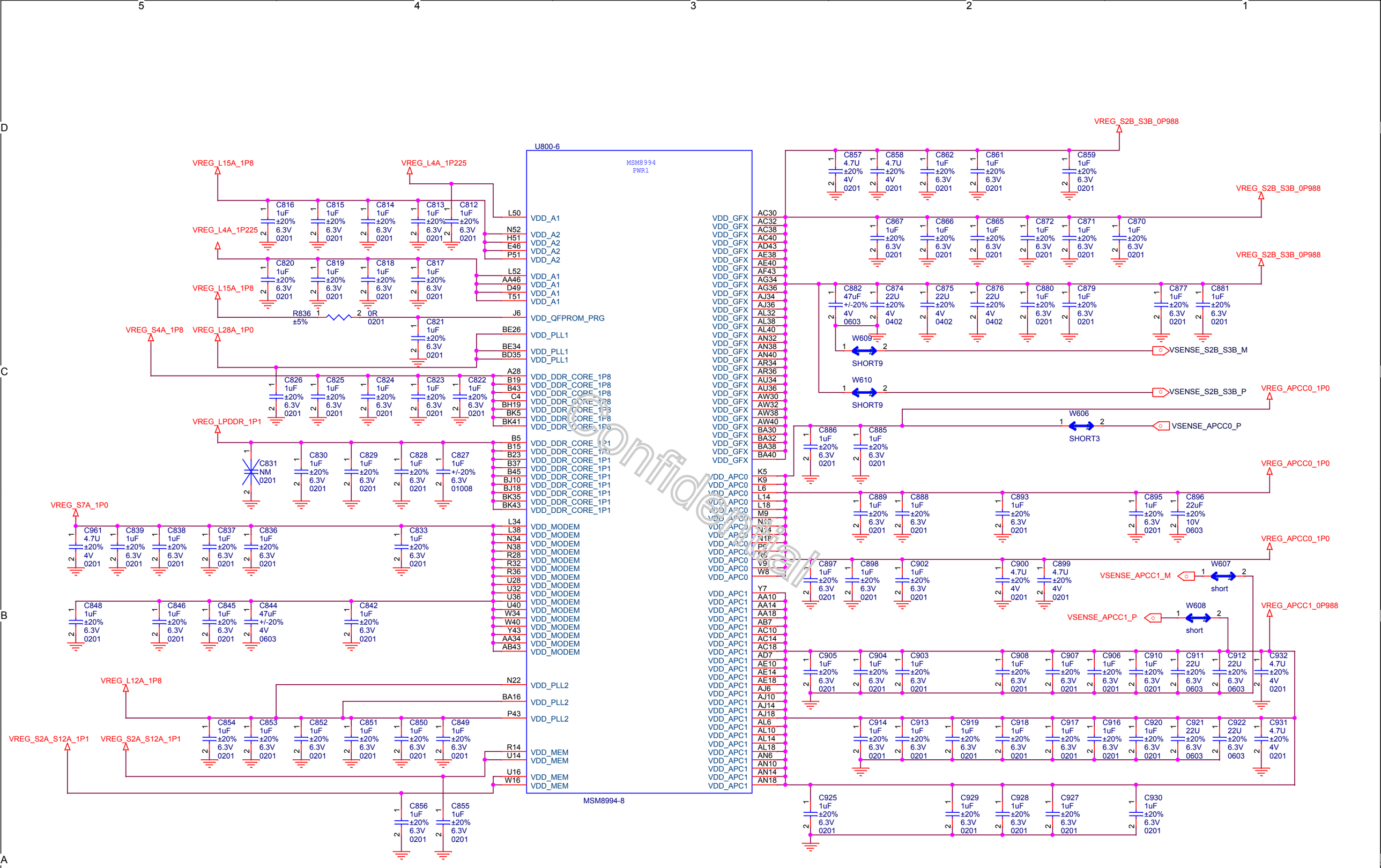

Confidential

Title	X7
Size A3	Document Number <Doc>
Rev	P0
Date: Wednesday, March 25, 2015	Sheet 18 of 41

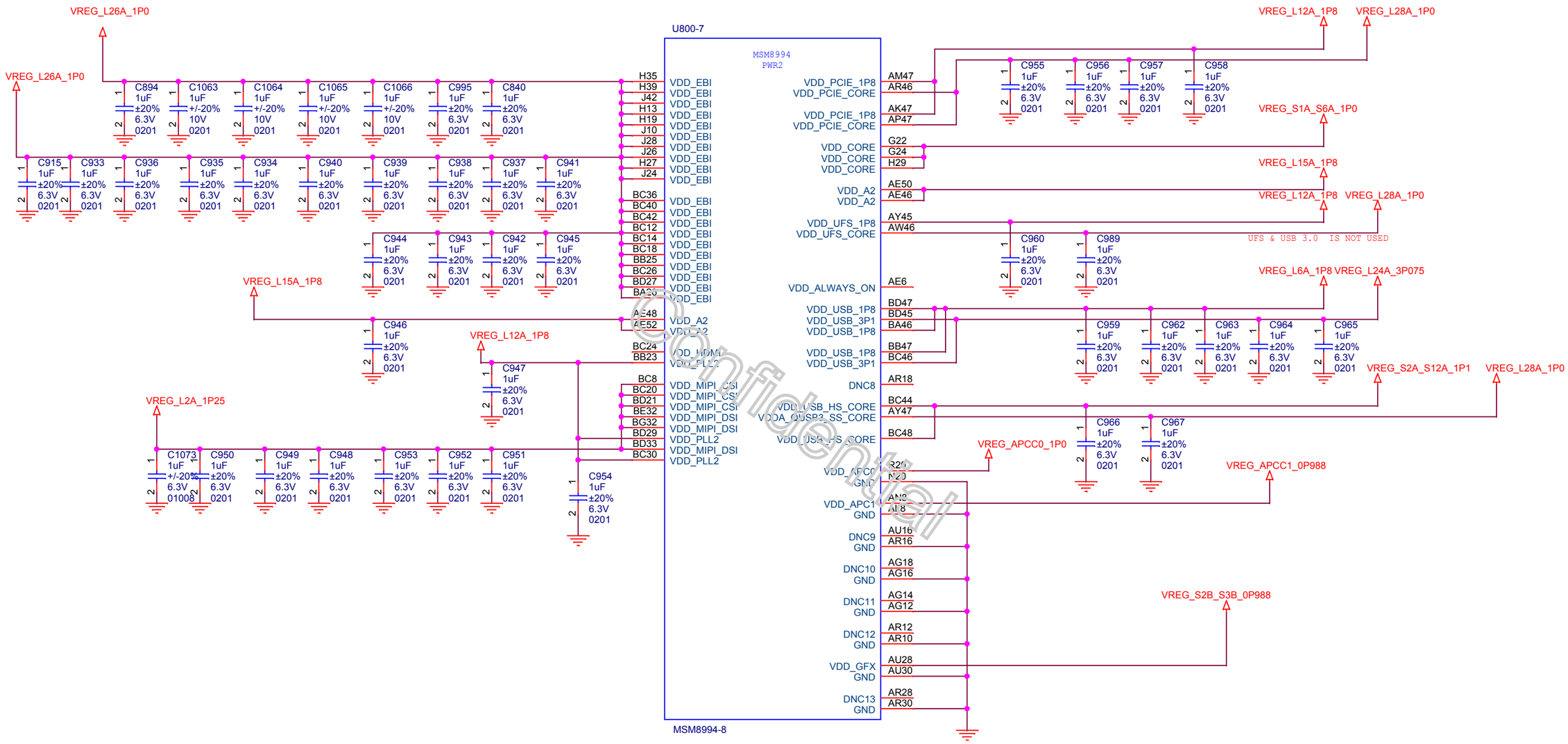

Confidential

Title	X7		
Size A3	Document Number <Doc>		Rev P0
Date: Wednesday, March 25, 2015	Sheet 19 of 41		

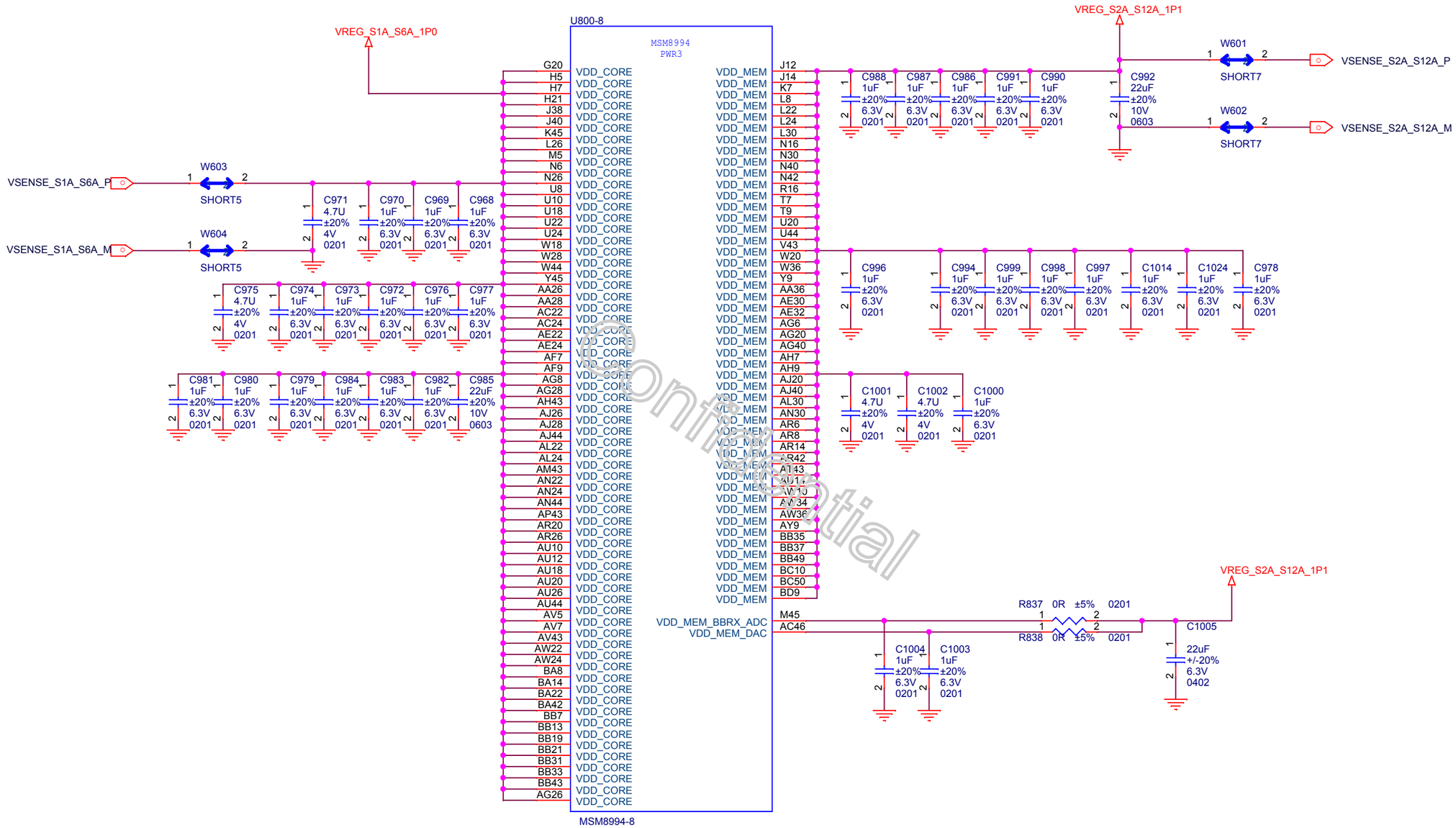

Confidential

Title	X7
Size A3	Document Number <Doc>
Rev	P0
Date:	Wednesday, March 25, 2015
Sheet	20 of 41

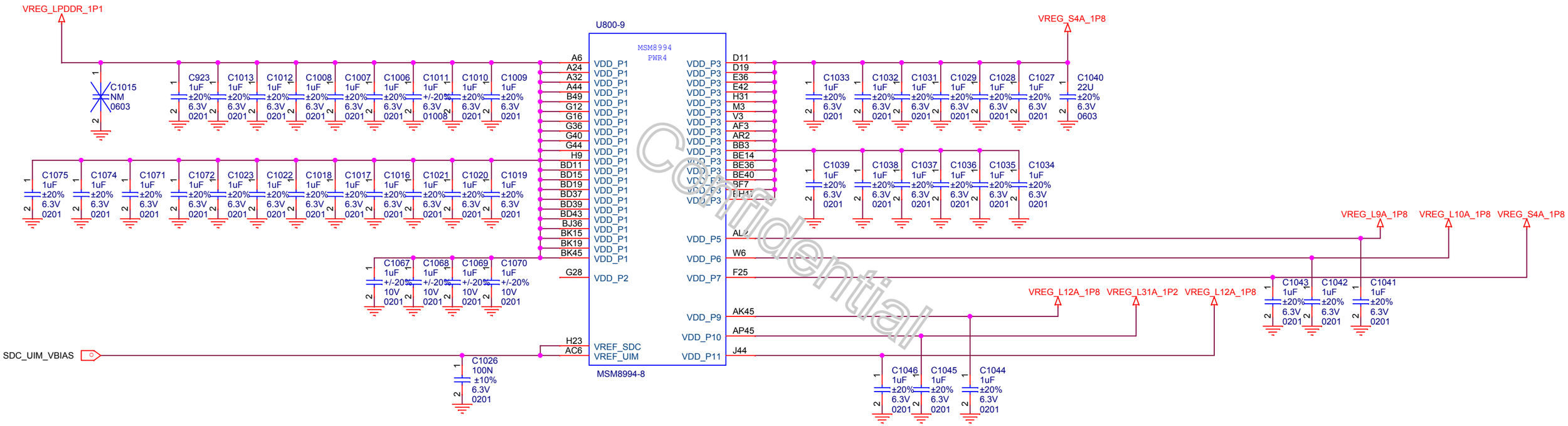

Confidential

Title	X7	
Size A3	Document Number <Doc>	Rev P0
Date: Wednesday, March 25, 2015	Sheet 21 of 41	

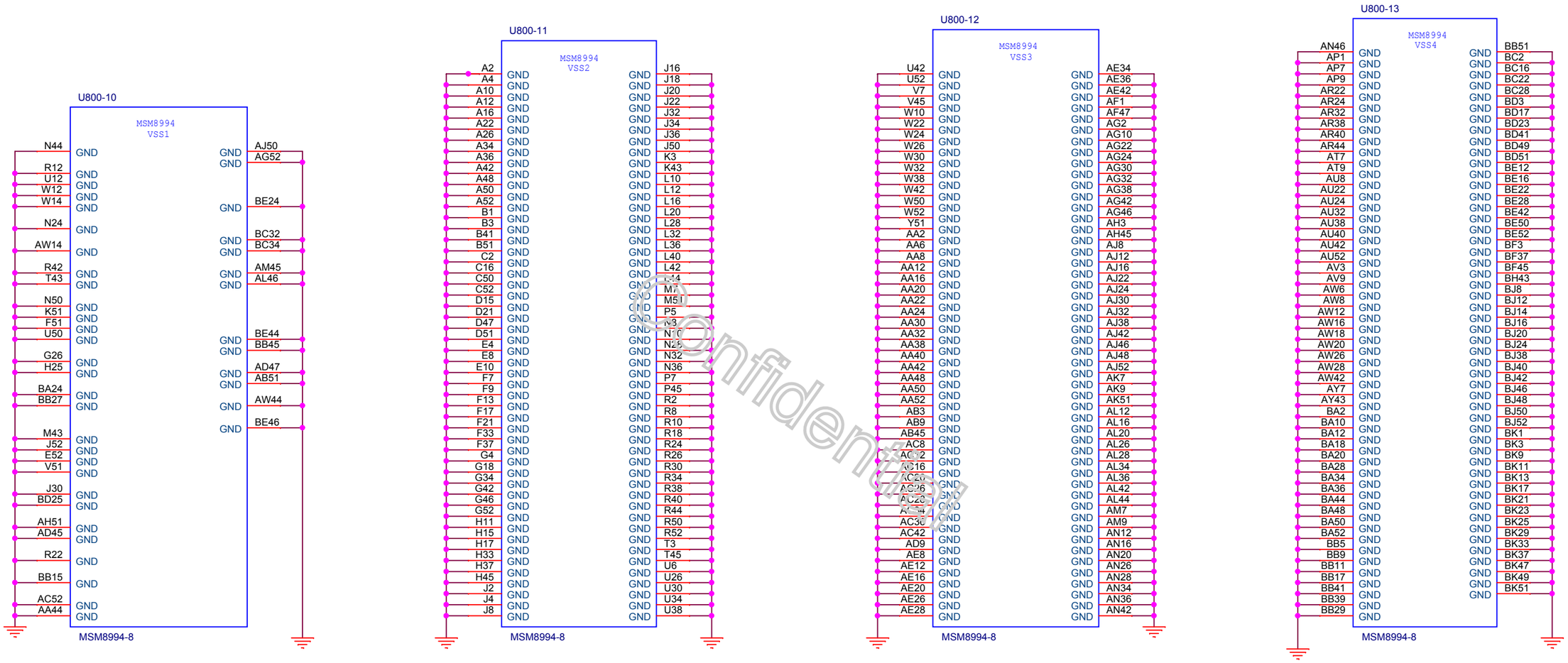

Confidential

Title	X7	
Size A3	Document Number <Doc>	Rev P0
Date: Wednesday, March 25, 2015	Sheet 22 of 41	

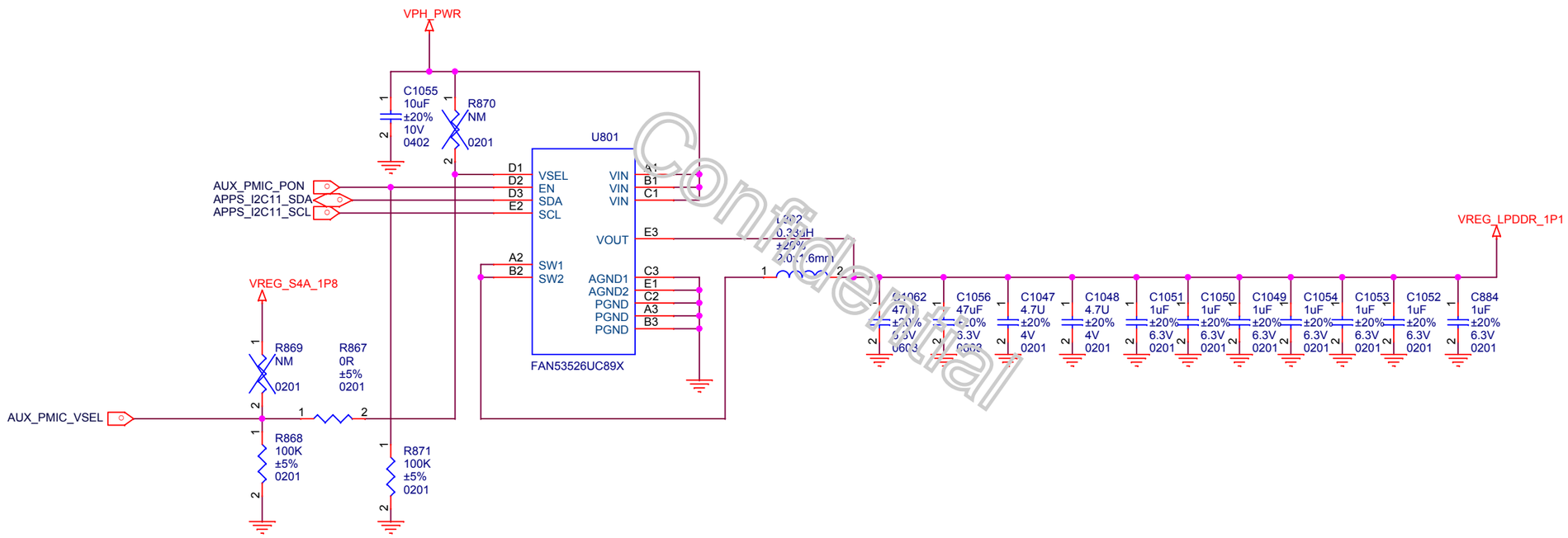

Confidential

Title	X7	
Size A3	Document Number <Doc>	Rev P0
Date: Monday, March 23, 2015	Sheet 23 of 41	

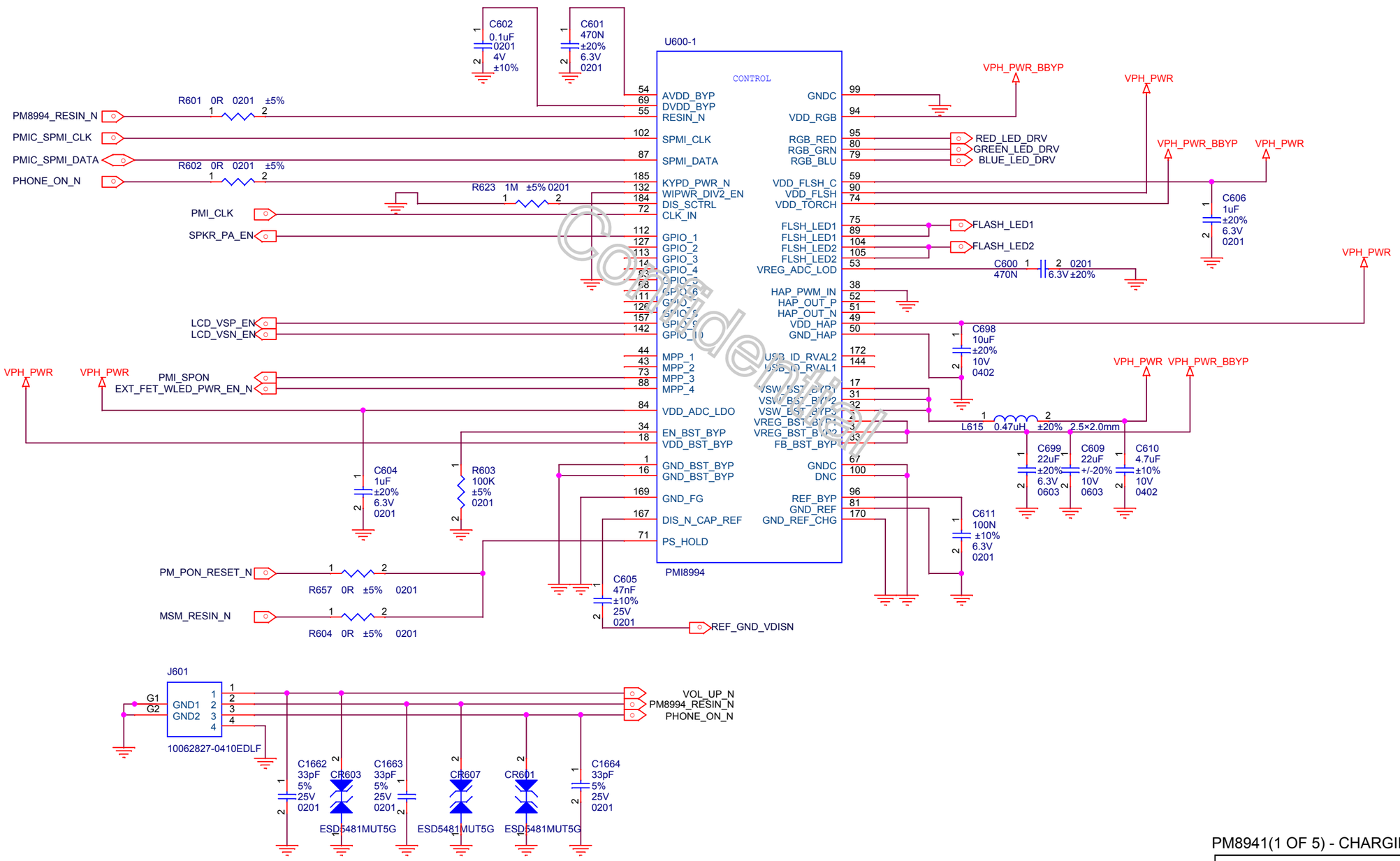

Confidential

PM8941(1 OF 5) - CHARGING

Title	X7	
Size A3	Document Number <Doc>	Rev P0
Date: Monday, March 23, 2015	Sheet 24 of 41	

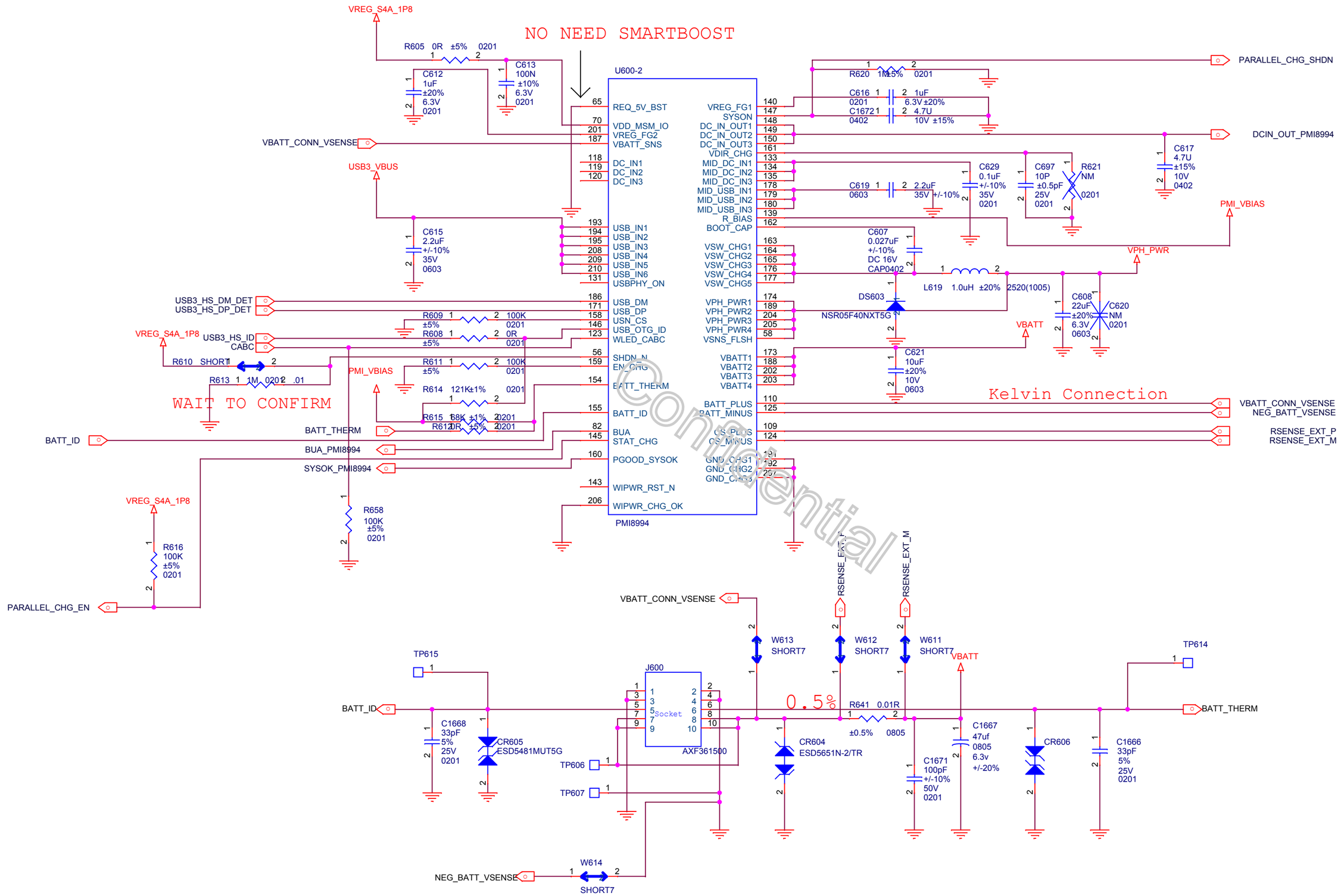

Title	X7	
Size A3	Document Number <Doc>	Rev P0
Date: Monday, March 23, 2015	Sheet 25 of 41	

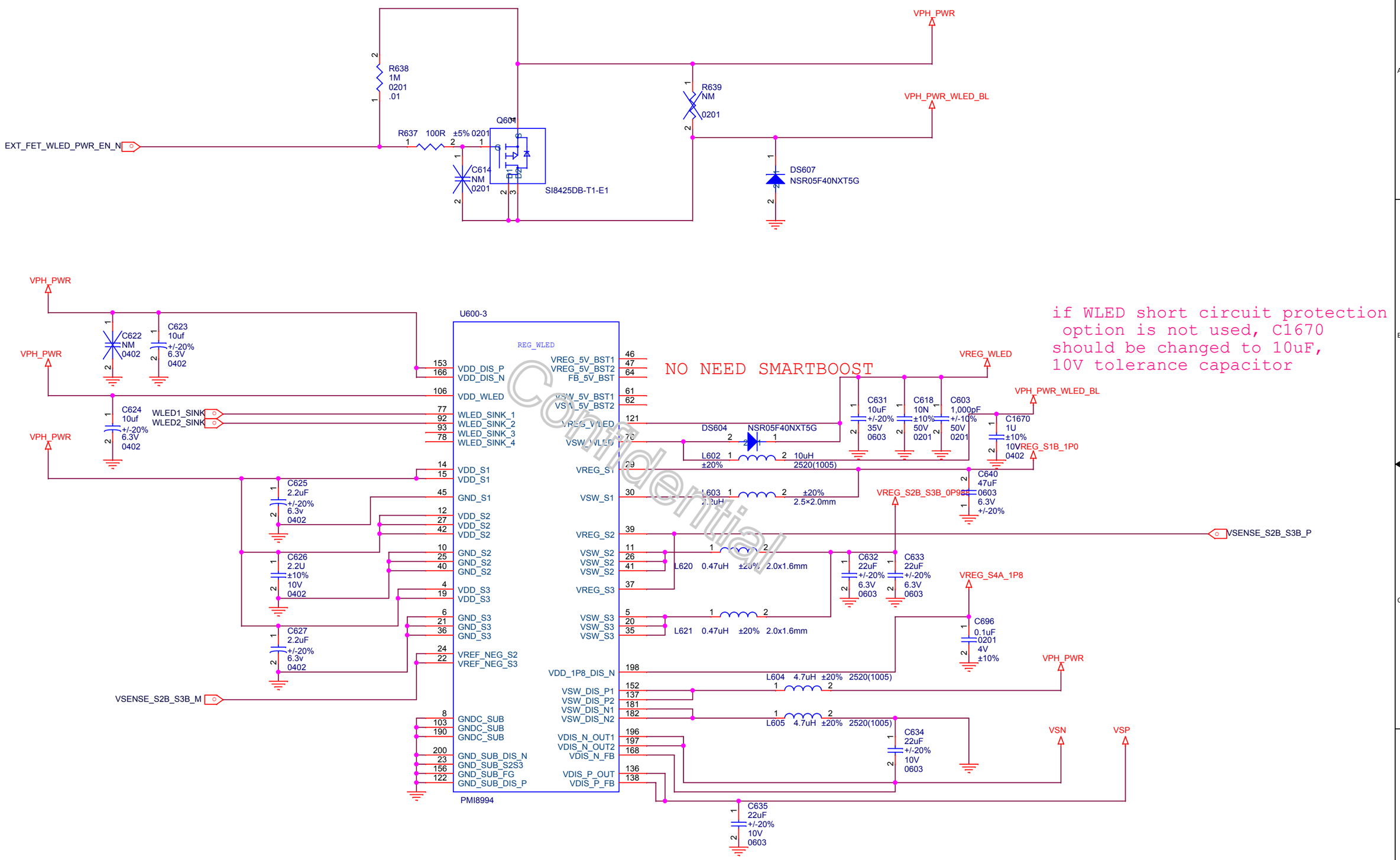

if WLED short circuit protection option is not used, C1670 should be changed to 10uF, 10V tolerance capacitor

Confidential

PM8941(3 OF 5) - SMPS

Title	X7	
Size A3	Document Number <Doc>	Rev P0
Date: Monday, March 23, 2015	Sheet 26 of 41	

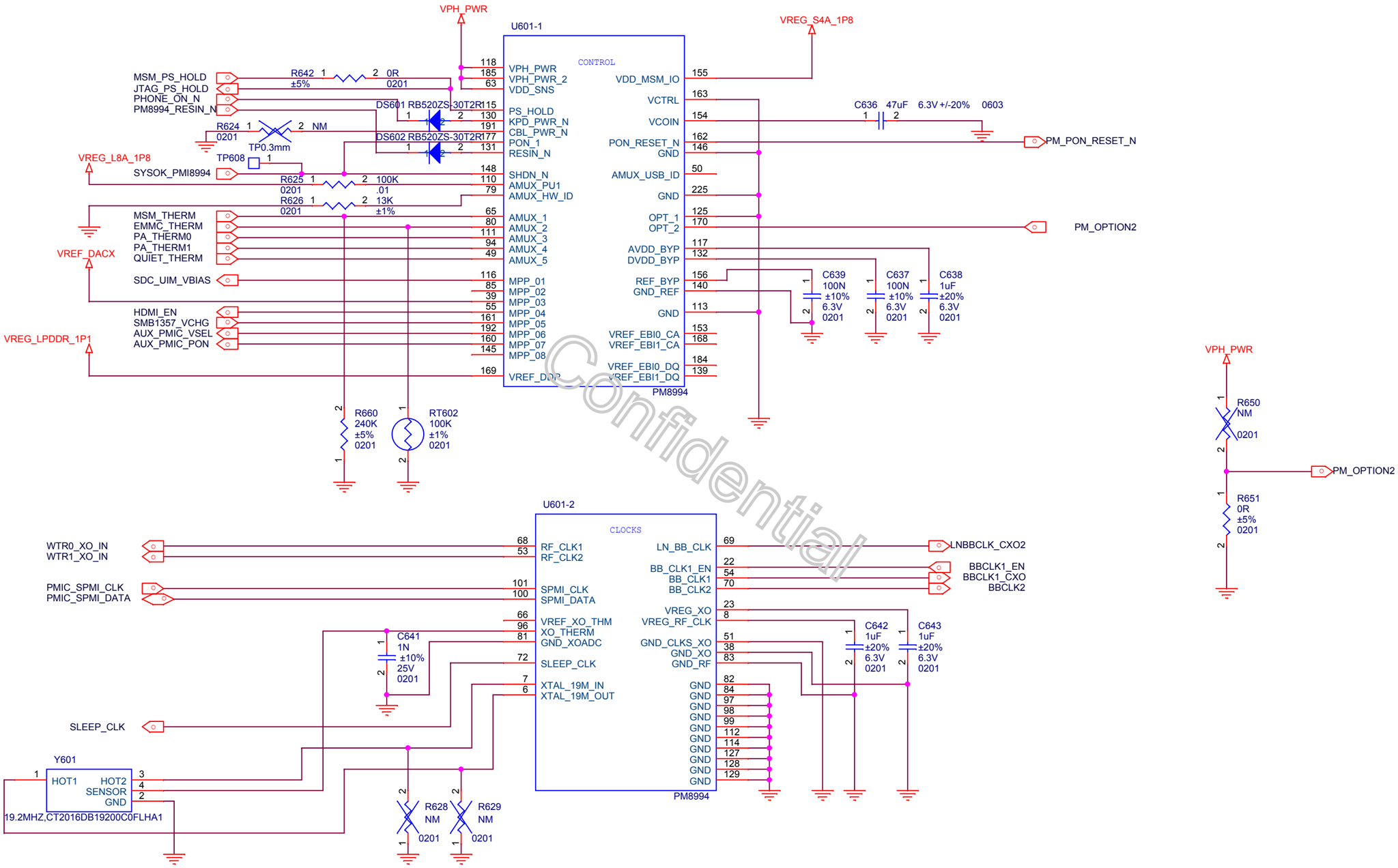

Confidential

PM8941(5 OF 5) - LED&GND

Title X7		
Size A3	Document Number <Doc>	Rev P0
Date: Monday, March 23, 2015	Sheet 27 of 41	

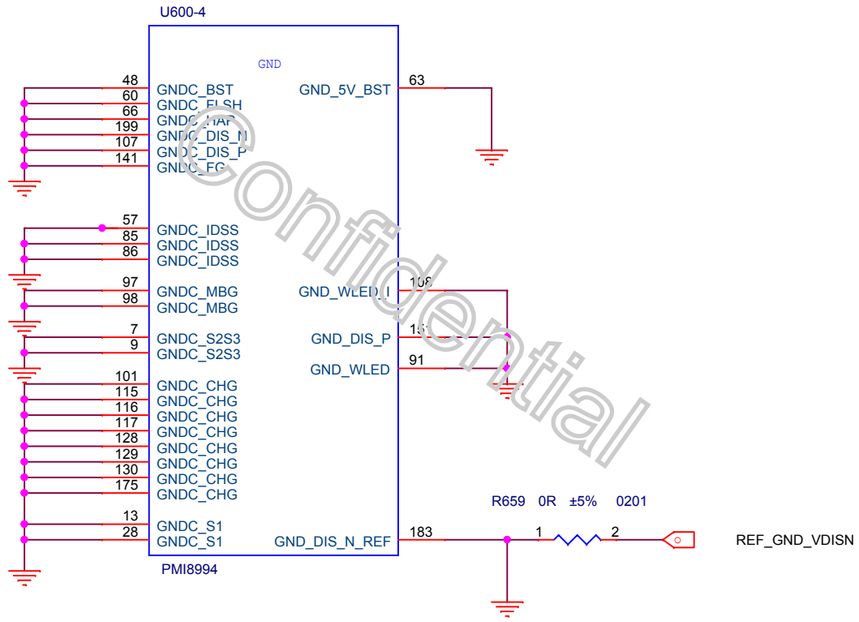

Confidential

PM8941(4 OF 5) - LDO

Title X7		
Size A3	Document Number <Doc>	Rev P0
Date: Monday, March 23, 2015	Sheet 28 of 41	

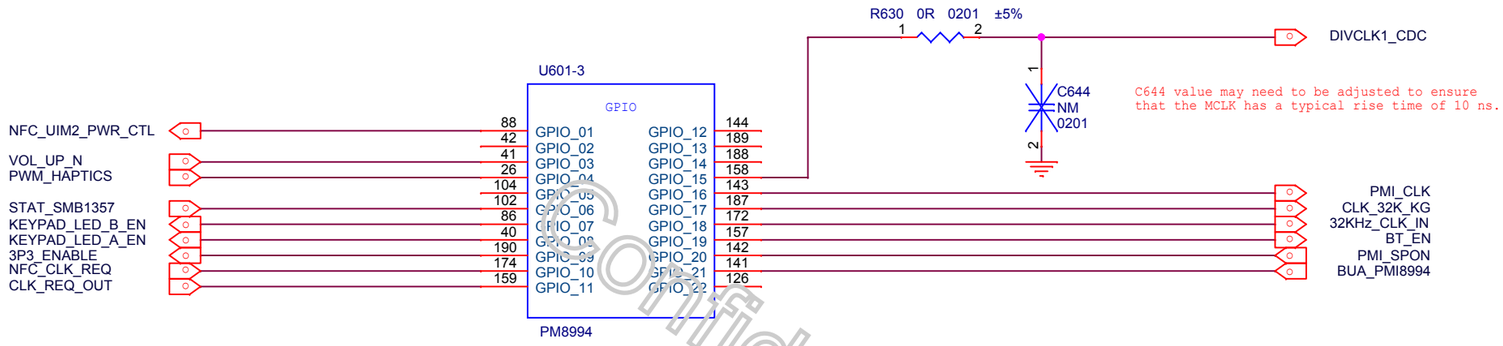

Confidential

Title	X7	
Size A3	Document Number <Doc>	Rev P0
Date: Monday, March 23, 2015	Sheet 29 of 41	

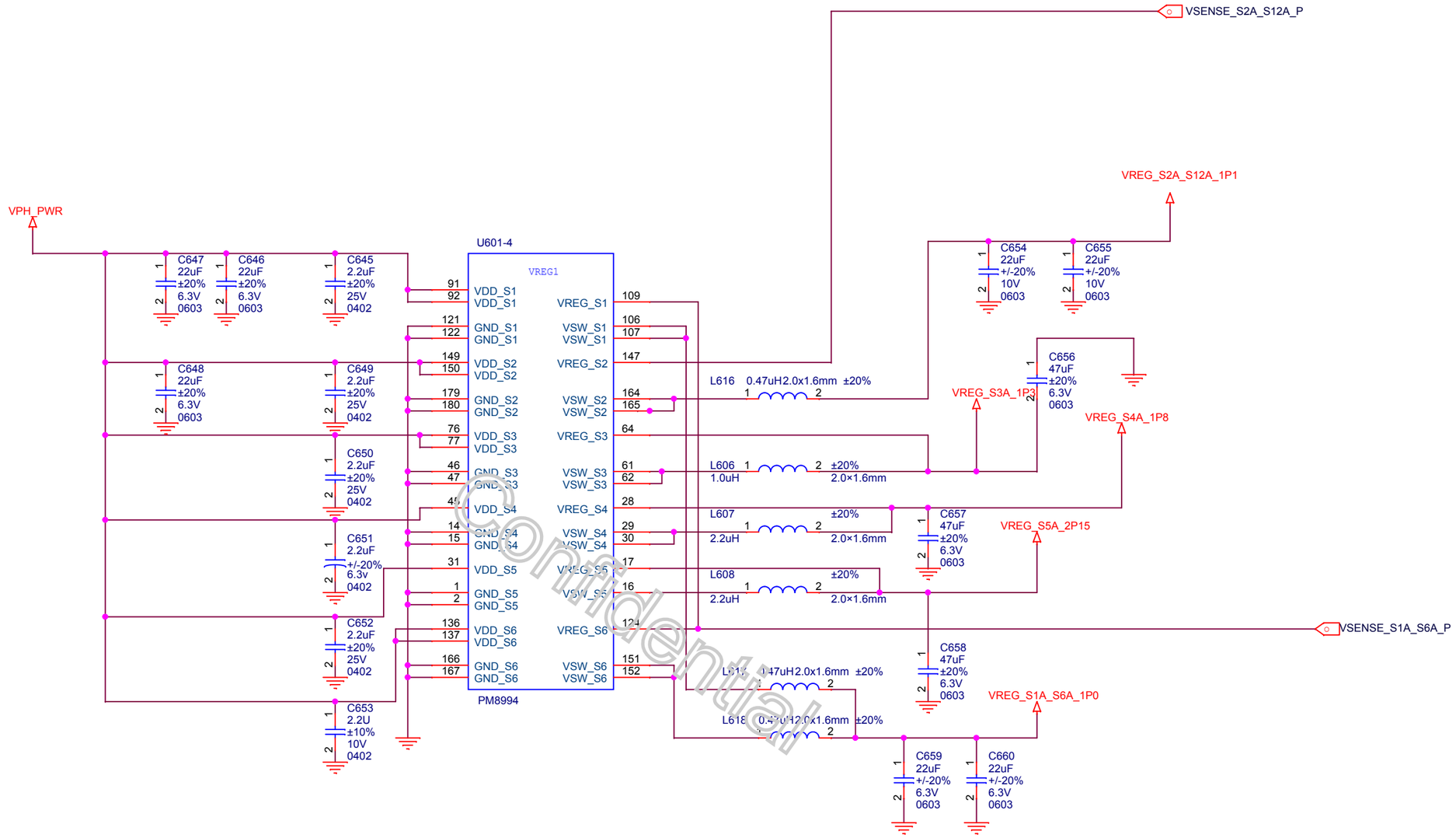

Confidential

Title	X7	
Size A3	Document Number <Doc>	Rev P0
Date: Monday, March 23, 2015	Sheet 30 of 41	

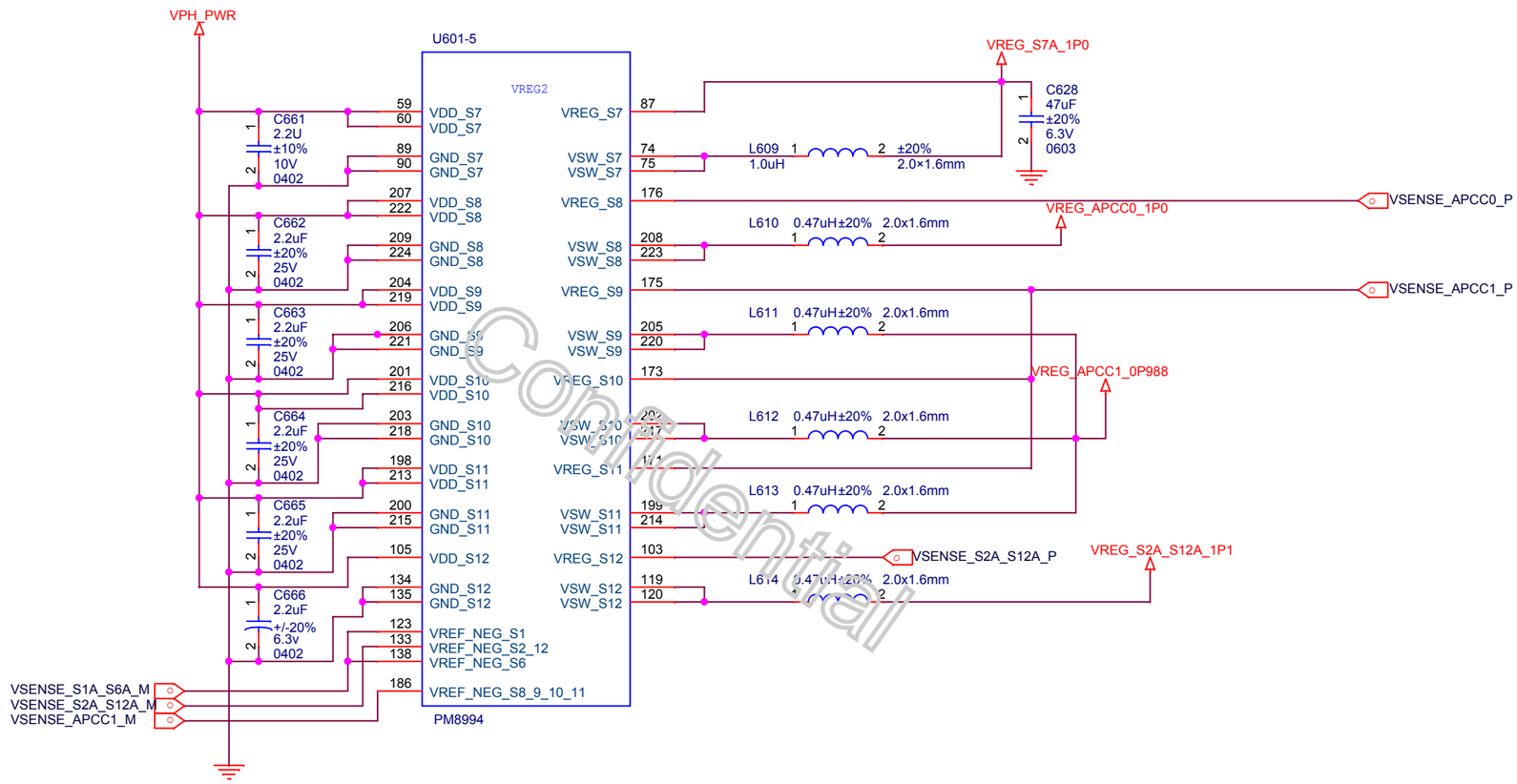

Confidential

Title	X7	
Size A3	Document Number <Doc>	Rev P0
Date: Monday, March 23, 2015	Sheet 31 of 41	

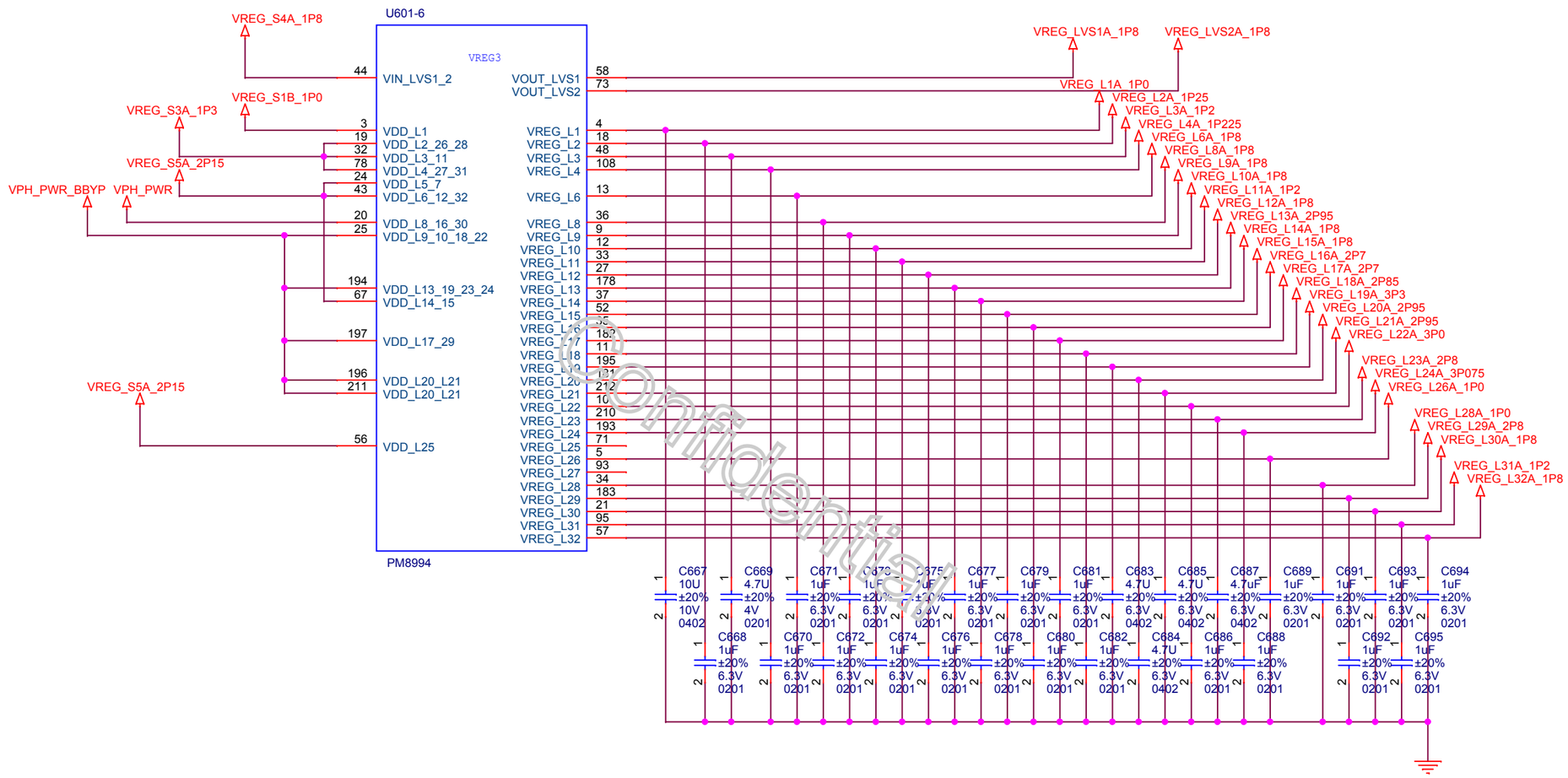

Qualcomm Confidential

Title	X7	
Size A3	Document Number <Doc>	Rev P0
Date: Monday, March 23, 2015	Sheet 32 of 41	

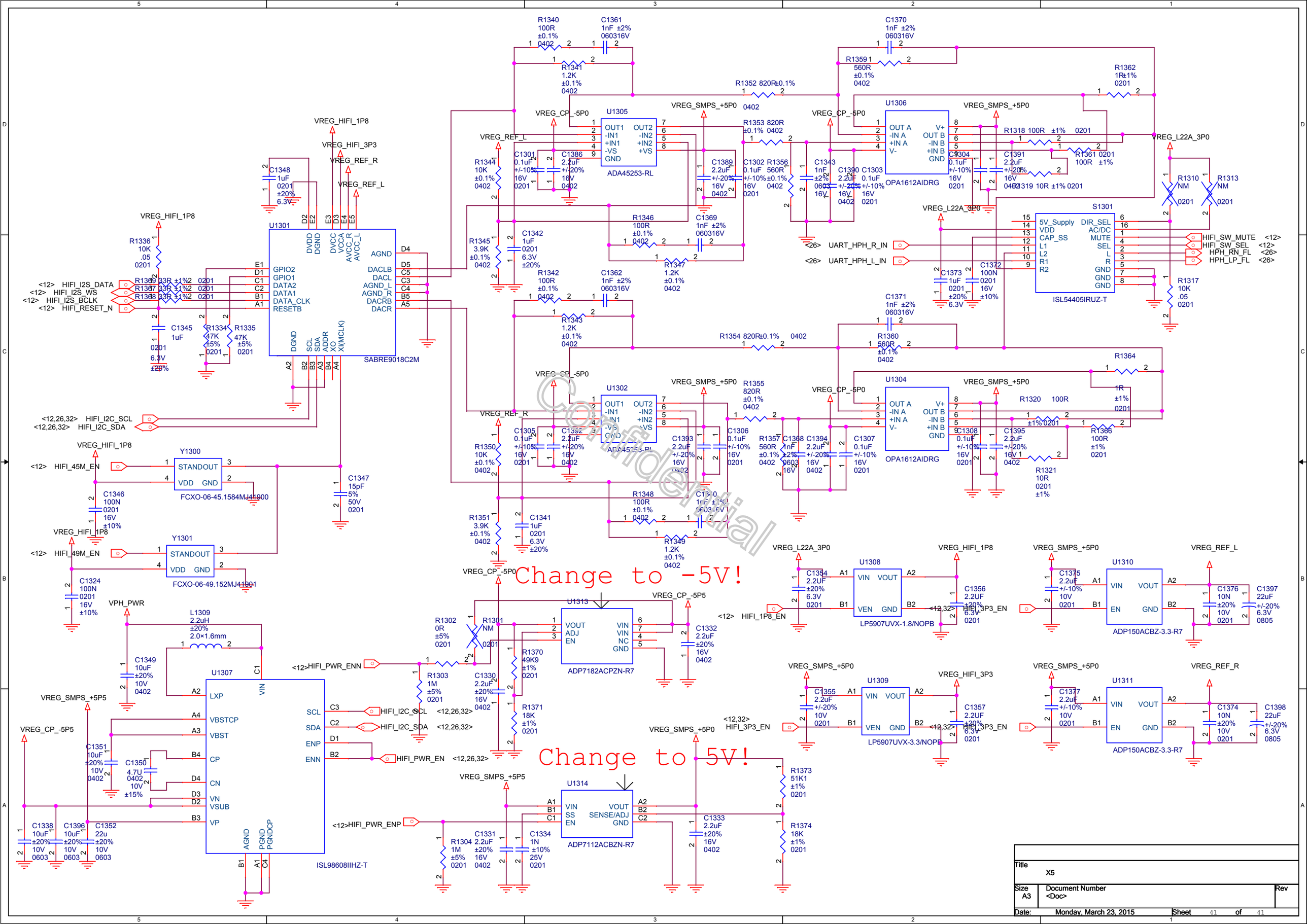
U1301
SABRE9018C2M
U1305
ADA45253-RL
U1302
ADA45253-RL
U1306
OPA1612AIDRG
U1304
OPA1612AIDRG
S1301
ISL54405IRUZ-T
Y1300
FCXO-06-45.1584MJ41900
Y1301
FCXO-06-49.152MJ41901
U1307
ISL98608IIHZ-T
U1313
ADP7182ACPZN-R7
U1314
ADP7112ACBZN-R7
U1308
LP5907UVX-1.8/NOPB
U1309
LP5907UVX-3.3/NOPB
U1310
ADP150ACBZ-3.3-R7
U1311
ADP150ACBZ-3.3-R7
Change to -5V!
Change to 5V!
Confidential
Title
X5
Size
A3
Document Number
<Doc>
Rev
Date:
Monday, March 23, 2015
Sheet
41
of
41

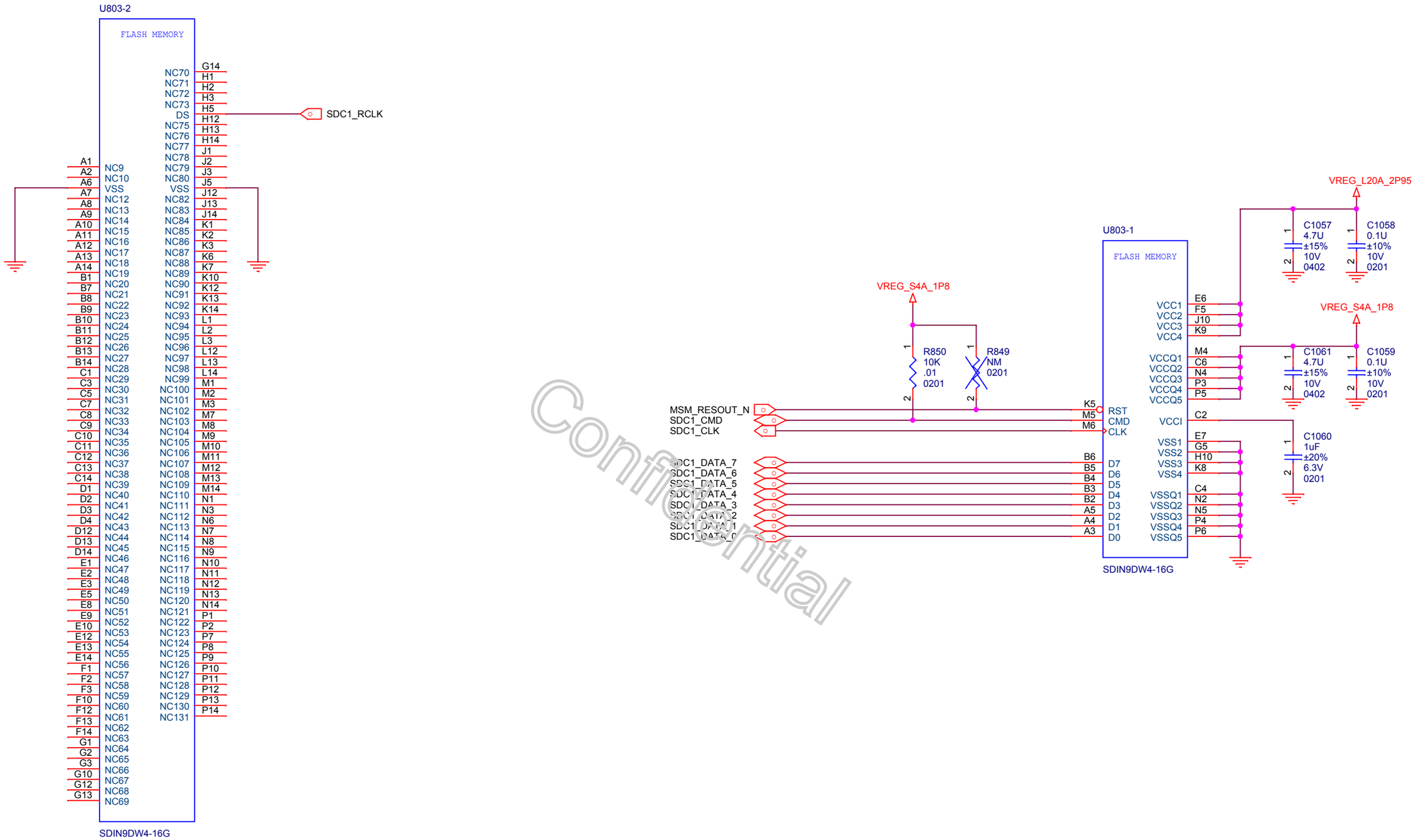

Confidential

MEMORY

Title	X7		
Size A3	Document Number <Doc>		Rev P0
Date: Monday, March 23, 2015	Sheet 33 of 41		

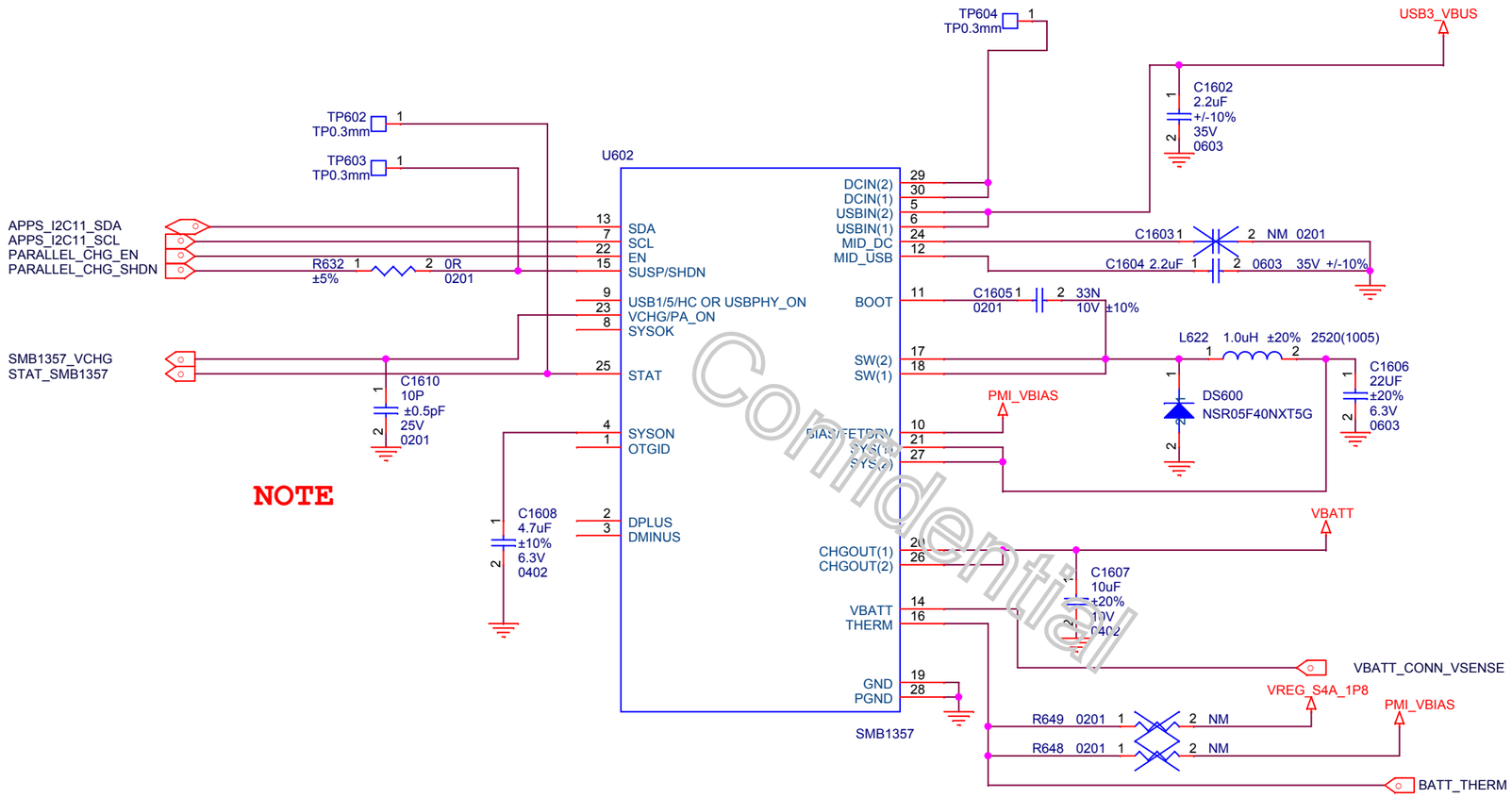

NOTE

Confidential

Title	X7		
Size A3	Document Number <Doc>		Rev P0
Date: Monday, March 23, 2015	Sheet 34 of 41		

HANDSET

AUX Mic

HEADSET

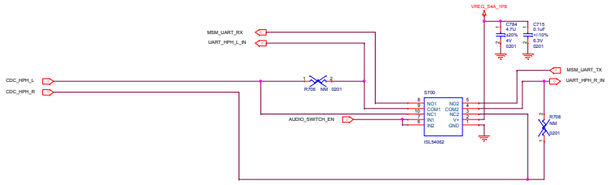

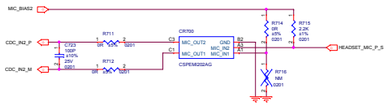

Confidential

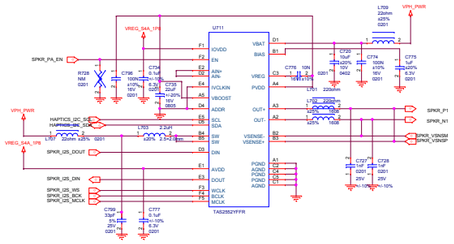

Connector

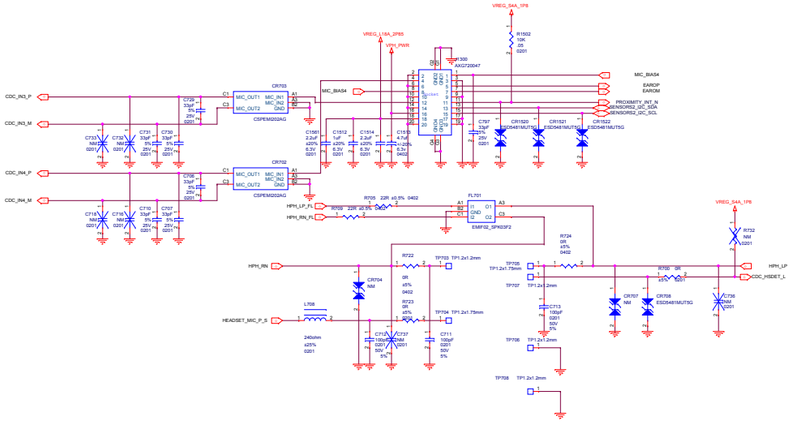

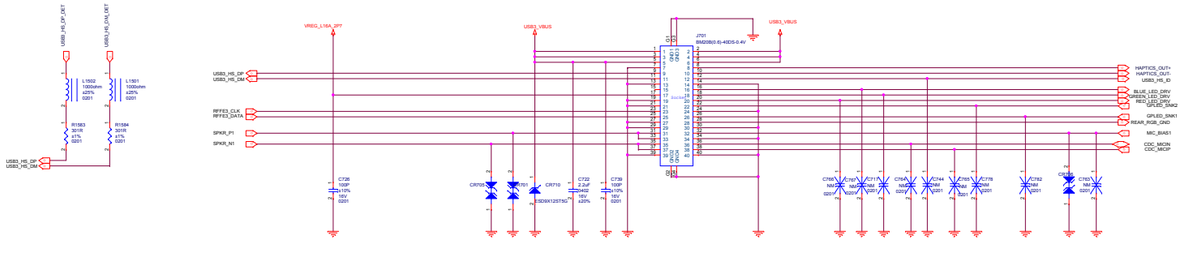

KEYPAD LED DRIVER

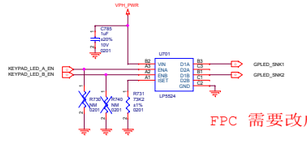

FPC 需要改成共阴极

Title	X7		
Size A0	Document Number <Doc>		Rev P9
Date: Monday, March 23, 2015		Sheet 33 of 41	

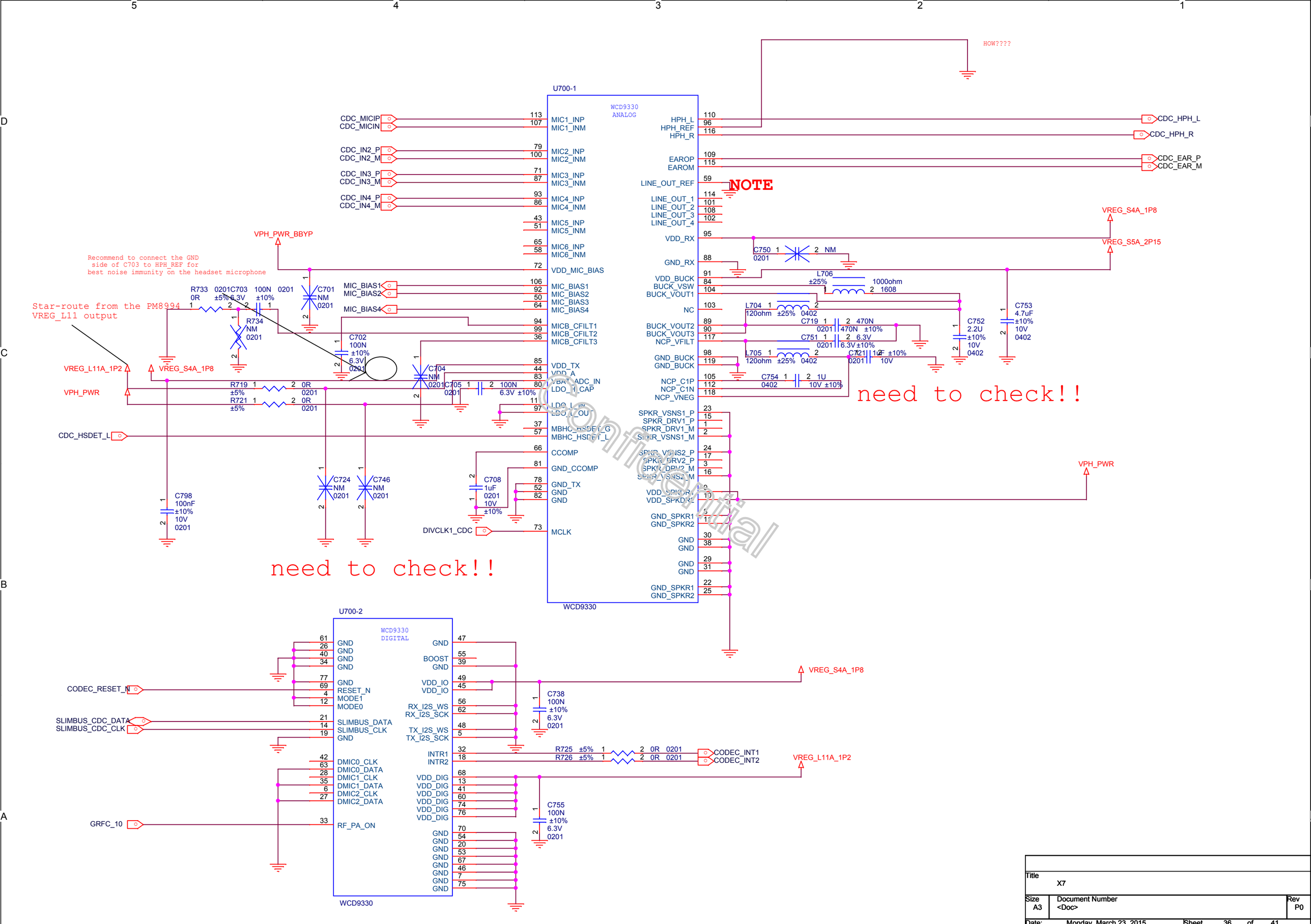

Title	X7	
Size A3	Document Number <Doc>	Rev P0
Date: Monday, March 23, 2015	Sheet 36 of 41	

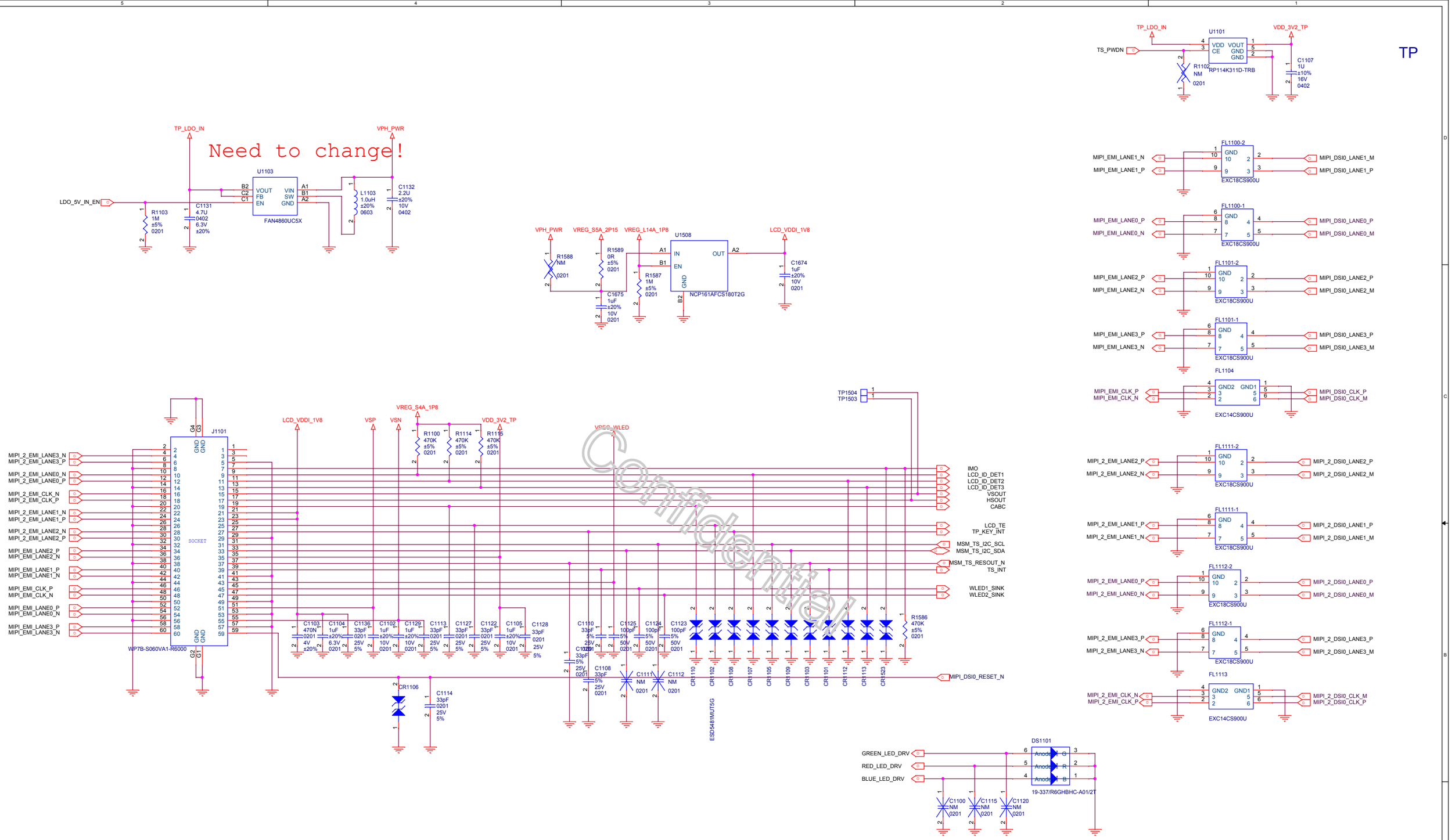

LCD

LCD

Title	XIAO MI X7	
Size A2	Document Number LCD	Rev P0
Date: Monday, March 23, 2015	Sheet 37 of 41	

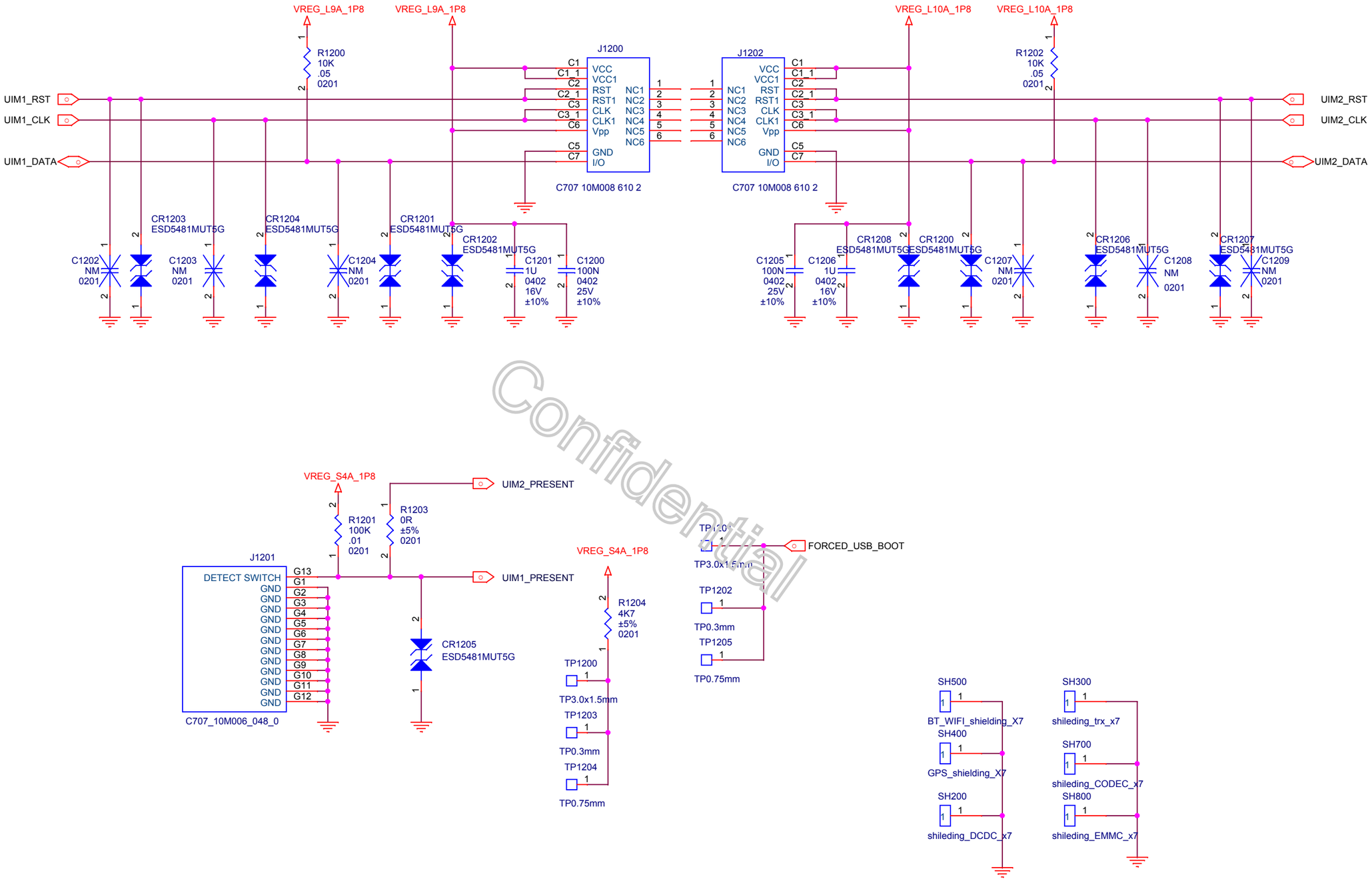

Confidential

SD&SIM CONNECTOR

XIAO MI		
Title: X7		
Size: A3	Document Number: SD&SIM CONNECTOR	Rev: P0
Date: Monday, March 23, 2015	Sheet 38 of 41	

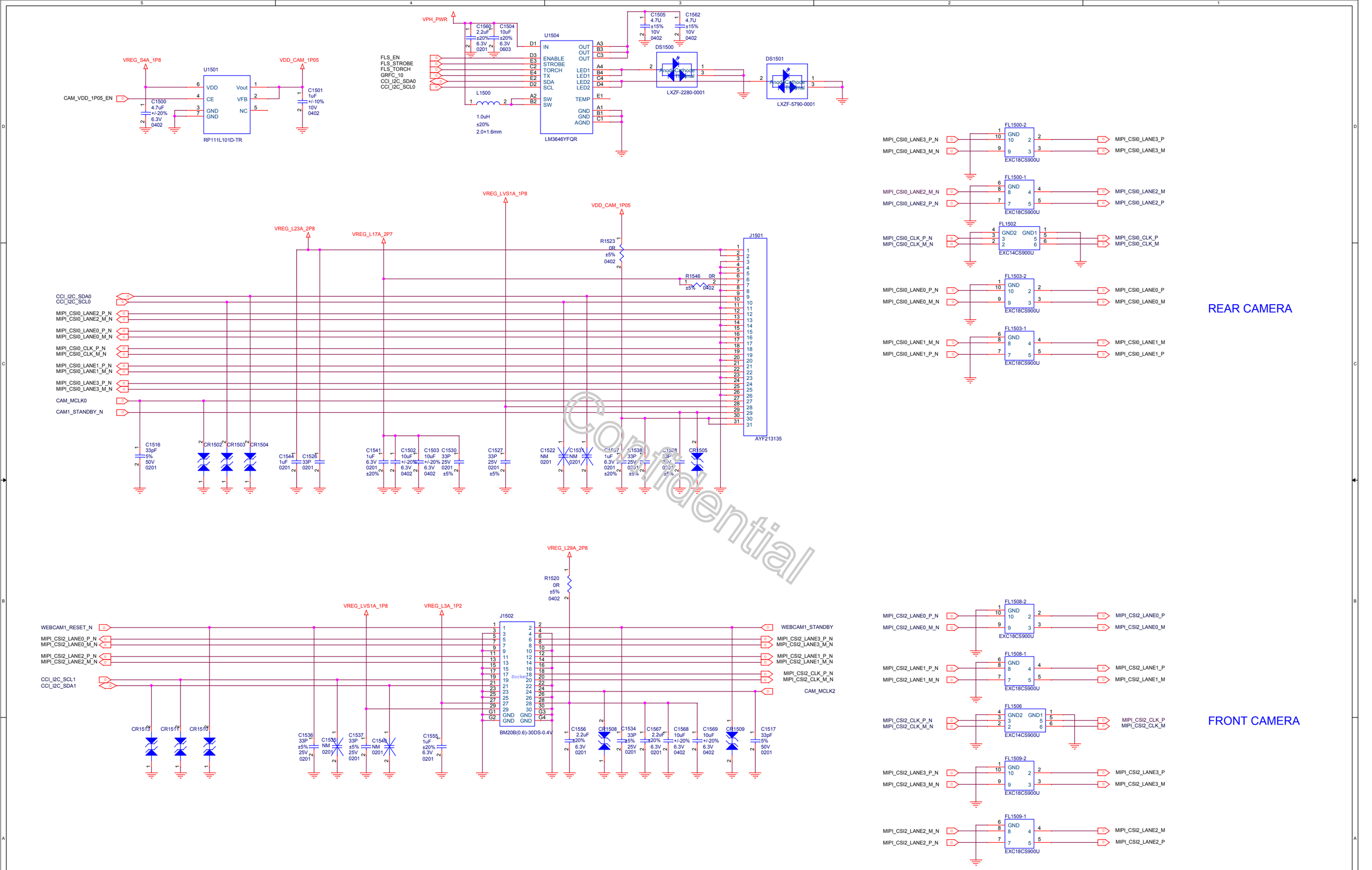

CAMERA

Title	XIAO MI	
Size A2	Document Number AUDIO	Rev P0
Date: Monday, March 23, 2015	Sheet 39 of 41	

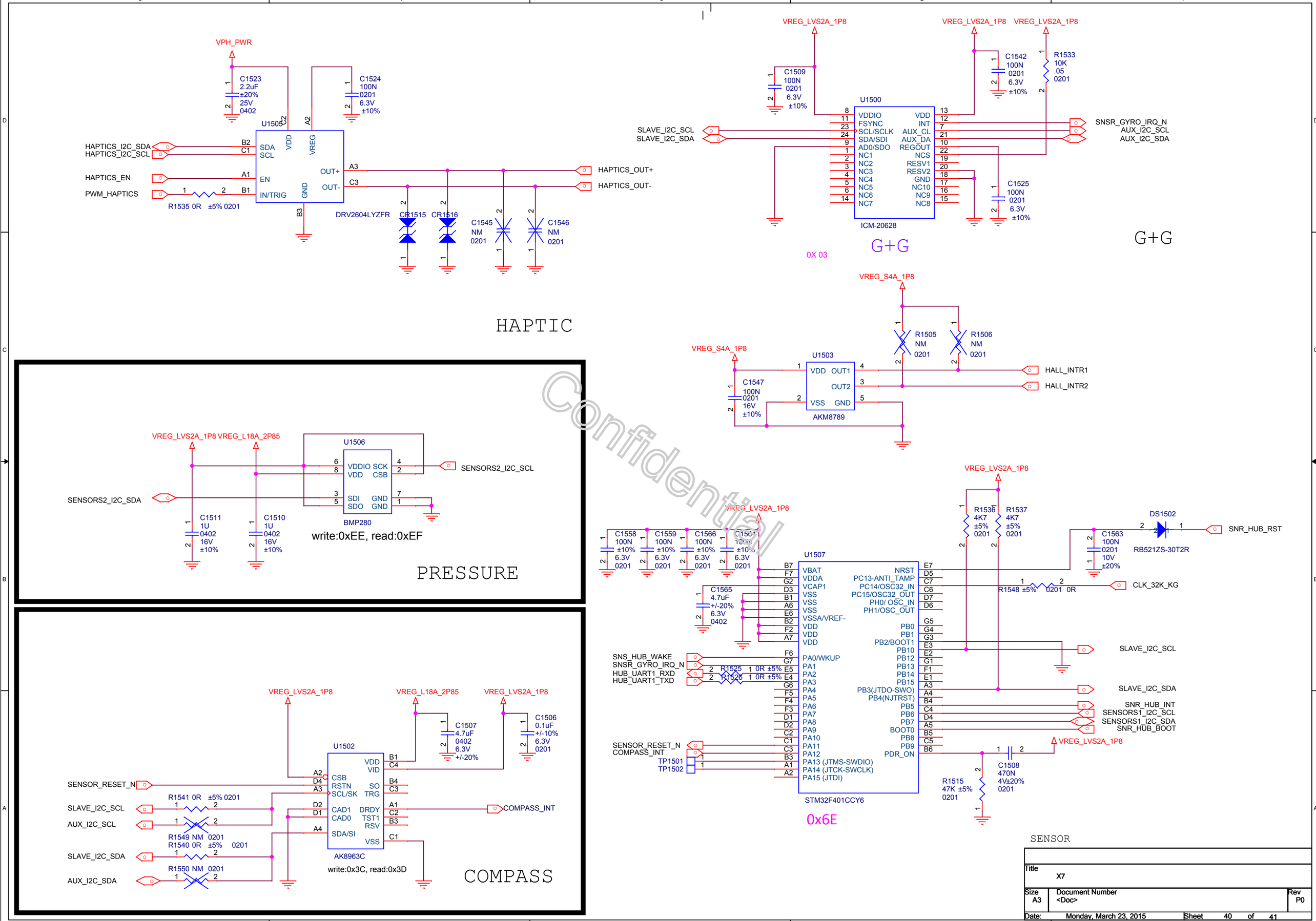

Title	X7
Size A3	Document Number <Doc>
Rev	P0
Date:	Monday, March 23, 2015
Sheet	40 of 41